STATE OF MAINE
DEPARTMENT OF TRANSPORTATION

CITY OF PORTLAND
CUMBERLAND COUNTY

PORTLAND INTERNATIONAL MARINE TERMINAL IMPROVEMENTS
PIN: 017820.00

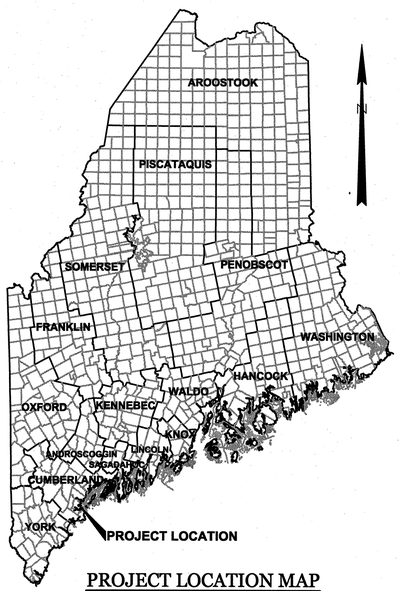

PROJECT LOCATION MAP

40 0 40 80

Scale in miles

SOURCE:

SITE LOCATION MAP

1/2 0 1/2 1

Scale in miles

SHEET INDEX

SHEET	NO.	TITLE
		GENERAL
G1	1 OF 71	TITLE/INDEX SHEET
G2	2 OF 71	GENERAL NOTES AND DESIGN CRITERIA
G3	3 OF 71	GENERAL PLAN
		CIVIL
C1	4 OF 71	EXISTING CONDITIONS PLAN
C2	5 OF 71	BORING LOGS I
C3	6 OF 71	BORING LOGS II
C4	7 OF 71	BORING LOGS III
C5	8 OF 71	CONSTRUCTION PHASING PLAN I
C6	9 OF 71	CONSTRUCTION PHASING PLAN II
C7	10 OF 71	CONSTRUCTION PHASING PLAN III
C8	11 OF 71	CONSTRUCTION PHASING PLAN IV
C9	12 OF 71	CONSTRUCTION PHASING PLAN V
C10	13 OF 71	CONSTRUCTION PHASING DETAILS
C11	14 OF 71	SITE DEMOLITION PLAN
C12	15 OF 71	TERMINAL BUILDING DEMOLITION PLAN
C13	16 OF 71	TERMINAL BUILDING DEMOLITION DETAILS I
C14	17 OF 71	TERMINAL BUILDING DEMOLITION DETAILS II
C15	18 OF 71	MISCELLANEOUS DEMOLITION DETAILS
C16	19 OF 71	SITE PLAN
C17	20 OF 71	SITE GRADING PLAN
C18	21 OF 71	SITE UTILITY PLAN
C19	22 OF 71	CONCEPTUAL CROSS SECTION
C20	23 OF 71	FENCING DETAILS I
C21	24 OF 71	FENCING DETAILS II
C22	25 OF 71	PAVEMENT MARKINGS PLAN
C23	26 OF 71	LANDSCAPING PLAN
C24	27 OF 71	LANDSCAPING DETAILS
C25	28 OF 71	MISCELLANEOUS DETAILS I
C26	29 OF 71	MISCELLANEOUS DETAILS II
C27	30 OF 71	MISCELLANEOUS DETAILS III
		STRUCTURAL
S1	31 OF 71	PIER PLAN AND GENERAL NOTES
S2	32 OF 71	PIER FRAMING PLAN AND ELEVATION
S3	33 OF 71	PILE CAP DETAILS
S4	34 OF 71	DECK DETAILS
S5	35 OF 71	APPROACH SLAB DETAILS
S6	36 OF 71	MAINTENANCE BUILDING MODIFICATION DETAILS

SHEET	NO.	TITLE
		SITE ELECTRICAL
E1	37 OF 71	EXISTING ELECTRICAL SITE PLAN
E2	38 OF 71	PROPOSED ELECTRICAL SITE PLAN
E3	39 OF 71	PROPOSED SITE LIGHTING PLAN
E4	40 OF 71	ELECTRICAL SINGLE LINE DIAGRAM
E5	41 OF 71	ELECTRICAL DETAILS I
E6	42 OF 71	ELECTRICAL DETAILS II
		ARCHITECTURAL
A.A1	43 OF 71	BUILDING FLOOR PLANS
A.A2	44 OF 71	BUILDING ROOF PLAN
A.A3	45 OF 71	BUILDING ELEVATIONS
A.A4	46 OF 71	BUILDING SECTIONS
A.A5	47 OF 71	WALL SECTIONS
A.A6	48 OF 71	EXTERIOR DETAILS I
A.A7	49 OF 71	EXTERIOR DETAILS II
A.A8	50 OF 71	WINDOW SCHEDULE AND DETAILS
A.A9	51 OF 71	DOOR SCHEDULE AND DETAILS
A.A10	52 OF 71	FINISH SCHEDULE, PARTITION TYPES & DETAILS
A.A11	53 OF 71	BATHROOM & KITCHENETTE FLOOR PLANS & ELEVATIONS
A.A12	54 OF 71	INTERIOR ELEVATIONS
A.A13	55 OF 71	CORRIDOR ELEVATIONS
A.A14	56 OF 71	REFLECTED CEILING PLAN
A.S1	57 OF 71	GENERAL NOTES
A.S2	58 OF 71	FOUNDATION PLAN
A.S3	59 OF 71	ROOF FRAMING PLAN
A.S4	60 OF 71	SECTIONS AND DETAILS I
A.S5	61 OF 71	SECTIONS AND DETAILS II
A.M1	62 OF 71	MECHANICAL DUCTWORK PLAN
A.M2	63 OF 71	MECHANICAL PIPING PLAN
A.M3	64 OF 71	HEAT PUMP SYSTEM SCHEMATIC
A.M4	65 OF 71	GENERAL MECHANICAL DETAILS
A.M5	66 OF 71	MECHANICAL EQUIPMENT SCHEDULES
A.P1	67 OF 71	PLUMBING FLOOR PLAN
A.P2	68 OF 71	PLUMBING SCHEDULES AND DETAILS
A.E1	69 OF 71	OFFICE BUILDING POWER PLAN
A.E2	70 OF 71	OFFICE BUILDING LIGHTING PLAN
A.E3	71 OF 71	OFFICE BUILDING ELECTRICAL DETAILS

STATE OF MAINE
DEPARTMENT OF TRANSPORTATION

APPROVED | DATE

COMMISSIONER:

CHIEF ENGINEER:

STATE OF MAINE — ROLAND A. LAVALLEE No. 6402 — LICENSED PROFESSIONAL ENGINEER

SIGNATURE

P.E. NUMBER

DATE

PROJECT INFORMATION

PROGRAM	MULTIMODAL
PROJECT MANAGER	PAUL D. POTTLE
DESIGNER	CRAIG R. MORIN, P.E.
CONSULTANT	HNTB CORP.
PROJECT RESIDENT	-
CONTRACTOR	-
PROJECT COMPLETION DATE	-

PIN 017820.00

PORTLAND INTERNATIONAL MARINE TERMINAL IMPROVEMENTS
CUMBERLAND COUNTY
PORTLAND

TITLE/INDEX SHEET

SHEET NUMBER

G1

1 OF 71

GENERAL NOTES:

1. THESE DRAWINGS FORM PART OF THE CONTRACT DOCUMENTS. REFER TO THE SPECIFICATIONS FOR ADDITIONAL REQUIREMENTS.

2. ELEVATIONS AND SOUNDINGS ARE IN FEET BASED ON PROJECT DATUM, NGVD29.

3. CONTRACTOR SHALL MAINTAIN ADEQUATE SURVEY CONTROL AT ALL TIMES TO ESTABLISH AND MAINTAIN ALL LINES AND ELEVATIONS.

4. ALL DIMENSIONS, ELEVATIONS & CONDITIONS SHALL BE VERIFIED IN THE FIELD BY THE CONTRACTOR. ANY DISCREPANCIES SHALL BE BROUGHT TO THE ATTENTION OF THE RESIDENT BEFORE ORDERING MATERIALS AND PROCEEDING WITH THE AFFECTED PART OF THE WORK.

5. ALL NORTH ARROWS SHOWN ARE GRID NORTH BASED ON NAD83.

6. THE EXACT SIZE & LOCATION OF ALL EXISTING UTILITIES SHALL BE FIELD VERIFIED BY THE CONTRACTOR. CARE SHALL BE TAKEN TO PROTECT ANY UTILITIES PRESENT AND ALL CONSTRUCTION SHALL BE COORDINATED WITH THE RESIDENT.

7. EXISTING FEATURES WERE SURVEYED BY JAMES D. NADEAU, LLC UNDER SUBCONTRACT TO THE MAINE PORT AUTHORITY BETWEEN OCTOBER 2010 AND NOVEMBER 2010 AND CAN ONLY BE CONSIDERED AS INDICATING THE CONDITIONS EXISTING AT THAT TIME.

8. IT IS THE CONTRACTOR'S SOLE RESPONSIBILITY TO DETERMINE ERECTION PROCEDURES AND SEQUENCE TO INSURE THE SAFETY OF THE FACILITIES AND THEIR COMPONENTS DURING DEMOLITION AND ERECTION UNLESS OTHERWISE DIRECTED BY THE RESIDENT. THIS INCLUDES THE ADDITION OF NECESSARY SHORING, SHEETING, TEMPORARY BRACING, GUYS OR TIEDOWNS. SUCH MATERIAL SHALL REMAIN THE PROPERTY OF THE CONTRACTOR AFTER COMPLETION OF THE PROJECT.

9. METHODS OF DEMOLITION, CONSTRUCTION AND ERECTION ARE THE CONTRACTOR'S RESPONSIBILITY UNLESS OTHERWISE SPECIFIED. IT IS THE CONTRACTOR'S RESPONSIBILITY TO PROVIDE AND MAINTAIN ENVIRONMENTAL CONTROLS AS REQUIRED BY FEDERAL, STATE AND MUNICIPAL REGULATIONS AND PERMITS. ENVIRONMENTAL CONTROLS SHALL INCLUDE BUT NOT BE LIMITED TO NOISE, TURBIDITY, LIQUIDS AND DUST.

10. THE CONTRACTOR SHALL BE RESPONSIBLE FOR ANY DAMAGE DONE TO STRUCTURES AND VESSELS OR INJURIES TO THE PUBLIC DURING THE CONSTRUCTION PHASE. THE CONTRACTOR SHALL FURNISH AND INSTALL TEMPORARY FACILITIES FOR THE PROTECTION OF THE WORK, WORKERS AND PUBLIC SAFETY.

11. ALL APPLICABLE FEDERAL, STATE AND MUNICIPAL REGULATIONS AND PERMITS SHALL BE FOLLOWED, INCLUDING THE FEDERAL DEPARTMENT OF LABOR, SAFETY, AND HEALTH, U.S. ARMY CORPS OF ENGINEERS, AND STATE/LOCAL WETLANDS CONTROL.

12. THE CONTRACTOR MAY BE CHARGED ANY ADDITIONAL COST OF REINSPECTION OR RETEST WHEN PRIOR REJECTION MAKES REINSPECTION OR RETEST NECESSARY.

13. PILE DRIVING, DRILLING, AND OTHER CONSTRUCTION ACTIVITY WHICH GENERATES LOUD NOISE OR VIBRATION ARE LIMITED TO THE HOURS NOTED IN THE SPECIFICATIONS.

14. THE PORTLAND INTERNATIONAL MARINE TERMINAL IS IN COMPLIANCE WITH MTSA 33 CFR PART 105. SPECIFIC DESIGN DETAILS AND CONSTRUCTION SEQUENCING ARE PROVIDED TO ENSURE COMPLIANCE IS MAINTAINED THROUGHOUT THE PROJECT. CONTRACTOR MAY PROPOSE VARIATIONS TO THE CONSTRUCTION PHASES SHOWN HEREIN UPON COMMENCEMENT OF CONSTRUCTION ACTIVITIES BUT SHALL NOT ASSUME THAT PROPOSED VARIATIONS WILL BE AUTHORIZED. ALL ACTIVITIES SHALL BE COORDINATED WITH THE PORT OPERATOR.

15. THE CONTRACTOR, ITS EMPLOYEES, AND SUBCONTRACTORS SHALL OBTAIN SECURITY PASSES INCLUDING TWIC CARDS AND CITY OF PORTLAND ID'S FOR THE DURATION OF THE PROJECT. NO PERSONNEL WILL BE PERMITTED OUTSIDE THE DESIGNATED PRIMARY CONSTRUCTION ZONE WITHOUT THE REQUIRED SECURITY PASS.

16. THE CONTRACTOR MAY BE REQUIRED TO RELOCATE TEMPORARY FENCING AND STAGING AREAS ALONG THE PIER IN THE EVENT THE OWNER REQUIRES ADDITIONAL SPACE FOR CRANE OPERATIONS. THE OWNER WILL PROVIDE THE CONTRACTOR WITH A VESSEL SCHEDULE WITH WEEKLY UPDATES.

17. THE CONTRACTOR SHALL MAINTAIN DUST CONTROL AT ALL TIMES DURING THE PROJECT. PERIODIC SWEEPING OF PAVEMENT SURFACES WITHIN THE CONSTRUCTION AREA AND ON COMMERCIAL STREET MAY BE REQUIRED DURING CONSTRUCTION AS DIRECTED BY THE RESIDENT AND REQUIRED BY MAINEDOT EROSION CONTROL SPECIFICATIONS.

18. ALL WORK ADJACENT TO OR WITHIN THE FORE RIVER REQUIRES ALL PERSONNEL TO WEAR NECESSARY FLOATATION EQUIPMENT AND/OR HARNESSES. THE CONTRACTOR SHALL PROVIDE A WORK SAFETY PLAN TO THE RESIDENT FOR APPROVAL PRIOR TO WORK.

19. WHERE DRILLING AND ANCHORING OF REINFORCING STEEL IS SPECIFIED, THE CONTRACTOR SHALL USE A MATERIAL LISTED ON THE MAINE DEPARTMENT OF TRANSPORTATION PRE-QUALIFIED LIST OF CHEMICAL ANCHORING MATERIALS. THE DEPTH OF THE EMBEDMENT SHALL BE SUFFICIENT TO DEVELOP 125% OF THE YIELD STRENGTH OF THE BAR, BUT SHALL BE NO LESS THAN THE MINIMUM DEPTH OF EMBEDMENT SPECIFIED. WHERE MINIMUM DEPTHS HAVE NOT BEEN SPECIFIED, BAR LENGTHS HAVE BEEN DEVELOPED BASED ON AN ASSUMED EMBEDMENT DEPTH OF 9" FOR #5 BARS, AND 11" FOR #6 BARS. THE CONTRACTOR SHALL VERIFY THE REQUIRED DEPTH OF EMBEDMENT AND ADJUST THE REQUIRED BAR LENGTHS AS NECESSARY.

20. DRAWING PLAN VIEWS WITH SCALES ARE INTENDED FOR FULL SIZE 22X34-INCH DRAWINGS.

21. ESTIMATED STRUCTURAL EXCAVATION FOR MAJOR STRUCTURES (OFFICE BUILDING) IS 600-CY AND FOR DRAINAGE (CB, DMH, SMH)) IS 350-CY.

M:\jobs\50921 - Maine Port Authority\002 - Portland IMT Facility\CAD\PLANS-G-GEN NOTES.dwg, 3/21/2011 11:47:07 AM, mielliott

CODES

1. AASHTO, "LRFD BRIDGE SPECIFICATIONS", 5TH EDITION, 2010 W/ INTERIMS.
2. IBC, 2009 EDITION
3. AISC, "STEEL CONSTRUCTION MANUAL", 9TH EDITION
4. AWS, D1.1, "STRUCTURAL WELDING CODE - STEEL", CURRENT EDITION
5. AWS, D1.2, "STRUCTURAL WELDING CODE - ALUMINUM", CURRENT EDITION
6. AWS, D1.5, "BRIDGE WELDING CODE", CURRENT EDITION
7. ACI, 318-02, "BUILDING CODE REQUIREMENTS FOR STRUCTURAL CONCRETE"
8. ASCE 7-05 MINIMUM DESIGN LOADS FOR BUILDINGS AND OTHER STRUCTURES.

PIER DESIGN CRITERIA

LIVE LOAD:
- UNIFORM LOAD: 1,000 PSF
- TRUCK LOAD: AASHTO HS-25
- CRANE LOAD: LIEBHERR LHM 320 (MODIFIED)
- STACKER LOAD: MI-JACK MJ50RS; TAYLOR TEC-950L

SNOW LOADS: 60 PSF GROUND SNOW

BUILDING DESIGN CRITERIA

BUILDING CODE:
- IBC, 2009 EDITION
- ASCE 7-05 MINIMUM DESIGN LOADS FOR BUILDINGS AND OTHER STRUCTURES

DESIGN CRITERIA:
- FLOOR LIVE LOAD: 100 PSF
- GROUND SNOW LOAD: 60 PSF
- WIND SPEED: 100 MPH
- SEISMIC: OCC. CAT. II, SITE CLASS D, DESIGN CAT. B

FOR ADDITIONAL BUILDING DESIGN CRITERIA SEE SHEET A.S1

GROUND STORAGE AREA DESIGN CRITERIA

35-INCH PAVEMENT SECTION: TAYLOR TEC-950L, 10,680 PASSES
HS-25 TRUCK, 10,680 PASSES
30-INCH PAVEMENT SECTION: TAYLOR TEC-950L, 10,680 PASSES
HS-25 TRUCK, 10,680 PASSES

CONSTRUCTION SEQUENCE NOTES:

1. IN ORDER TO MAINTAIN FACILITY OPERATIONS AND OVERALL SITE SECURITY THROUGHOUT THE PROJECT, A SERIES OF CONSTRUCTION SEQUENCE DRAWINGS ARE INCLUDED HEREIN. IT IS THE CONTRACTOR'S RESPONSIBILITY TO REVIEW THE PROPOSED CONSTRUCTION SEQUENCE AND ENSURE THAT THE FACILITY'S OPERATIONS AND SITE SECURITY ARE NOT COMPROMISED AT ANY TIME DURING THE PROJECT. ONCE THE PROJECT IS UNDERWAY, THE CONTRACTOR MAY SUBMIT VARIATIONS TO THIS SEQUENCE BUT SHALL NOT ASSUME THAT SAID VARIATIONS WILL BE AUTHORIZED.

DEMOLITION NOTES:

1. DEMOLITION SHALL BE CONDUCTED TO PREVENT DEBRIS FROM FALLING INTO THE RIVER. TO THE MAXIMUM EXTENT PRACTICABLE, ALL CONSTRUCTION DEBRIS, INCLUDING ANY LIQUIDS OR SLURRIES THAT ARE PRODUCED AS PART OF THE DEMOLITION, SHALL BE CAPTURED AND DISPOSED OF PROPERLY. THE CONTRACTOR SHALL COMPLY WITH APPLICABLE PERMIT CONDITIONS AND ENVIRONMENTAL REGULATIONS LISTED IN THE SPECIFICATIONS. WORK SHALL INCLUDE REMOVAL OF ANY CONSTRUCTION DEBRIS FROM THE RIVER AND INSTALLATION AND MAINTENANCE OF APPROPRIATE TURBIDITY CONTROLS DURING DEMOLITION AND CONSTRUCTION SUCH THAT NO TURBIDITY ESCAPES THE IMMEDIATE WORK AREA. UNDERWATER INSPECTIONS MAY BE CONDUCTED BY THE OWNER'S REPRESENTATIVE TO ENSURE ALL DEMOLITION AND CONSTRUCTION DEBRIS IS REMOVED FROM THE RIVER.

2. THE EXISTING SECURITY SYSTEM AND CLOSED CIRCUIT TELEVISION SYSTEM SHALL REMAIN FULLY FUNCTIONAL DURING ALL PHASES OF CONSTRUCTION. WORK SHALL BE COORDINATED WITH GALAXY INTEGRATED TECHNOLOGIES AND THE RESIDENT.

3. A BUILDING SURVEY WAS CONDUCTED BY ABATEMENT PROFESSIONALS IN DECEMBER 2010 AND DETERMINED THAT TRACE QUANTITIES OF HAZARDOUS MATERIALS ARE PRESENT WITHIN THE IMT BUILDING AND THE U.S CUSTOMS BUILDING. LOCATIONS AND QUANTITIES OF THESE MATERIALS ARE NOTED HEREIN AND IN THE SPECIFICATIONS. REMOVAL OF THESE MATERIALS SHALL BE IN ACCORDANCE WITH OSHA REGULATIONS.

4. MATERIALS SCHEDULED FOR REMOVAL AND DISPOSAL THAT MAY HAVE SALVAGEABLE VALUE TO THE CONTRACTOR INCLUDE THE FOLLOWING:
- -STEEL (BEAMS AND COLUMNS) NOTE: SOME ELEMENTS CONTAIN LEAD PAINT
- -SHEET METAL (ROOF AND SIDING)
- -CONCRETE SLABS (FLOOR)
- -ELECTRICAL WIRING
- -BITUMINOUS PAVEMENT
- -CONCRETE PLANTER BOXES

TIDAL DATA:	NGVD29	MLLW
TOP OF PIER DECK (ALONG EDGE OF DECK)	15.32±	19.84
FIRST FLOOR ELEVATION (FFE), OFFICE BUILDING	13.77	18.29
100 Yr flood recurrence flood wave zone (BFE) (V Zone)	12.00	16.52
100 Yr recurrence flood zone (still water)	10.00	14.52
Highest observed water level (02/07/78)	9.61	14.13
Mean Higher High Water (MHHW)	5.39	9.91
Mean High Water (MHW)	4.95	9.47
Notional Geodetic Vertical Datum (NGVD) 1929	0.00	4.52
Mean Low Water (MLW)	-4.18	0.34
Mean Lower Low Water (MLLW)	-4.52	0.00
Lowest observed water level (11/30/55)	-7.97	-3.45

NOAA TIDAL STATION ID: 8418150, PORTLAND, CASCO BAY, MAINE
EPOCH: 1983-2001, UNITS: FEET

ABBREVIATIONS:

BLDG	BUILDING
CIP	CAST-IN-PLACE
CLR	CLEAR
CMP	CORRUGATED METAL PIPE
CY	CUBIC YARD
DIA	DIAMETER
EA	EACH
EF	EACH FACE
EL	ELEVATION IN FEET
EW	EACH WAY
EXP. JT.	EXPANSION JOINT
FFE	FIRST FLOOR ELEVATION
FS	FAR SIDE
HDG	HOT DIPPED GALVANIZED
HSS	HOLLOW STRUCTURAL SECTIONS
ID	INSIDE DIAMETER
IMT	INTERNATIONAL MARINE TERMINAL
K (KIP)	1000 POUNDS
LBS	POUNDS
LF	LINEAR FEET
MAX	MAXIMUM
MIL	.001 INCHES
MIN.	MINIMUM
NS	NEAR SIDE
NTS	NOT TO SCALE
OC	ON CENTER
PSF	POUNDS PER SQUARE FOOT
R	RADIUS
REF	REFERENCE
REQ'D	REQUIRED
SF	SQUARE FEET
SS	STAINLESS STEEL
STD	STANDARD
SWL	SAFE WORKING LOAD
TBM	TEMPORARY BENCHMARK
TEMP	TEMPORARY
TYP	TYPICAL
UON	UNLESS OTHERWISE NOTED

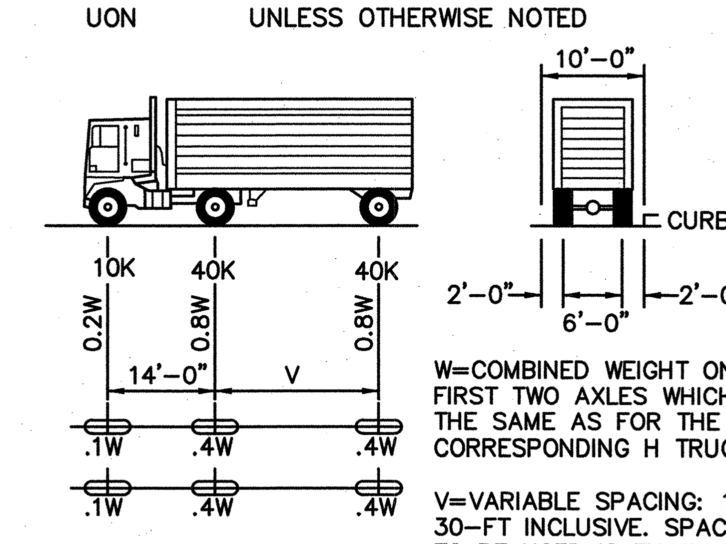

W=COMBINED WEIGHT ON THE FIRST TWO AXLES WHICH IS THE SAME AS FOR THE CORRESPONDING H TRUCK.

V=VARIABLE SPACING: 14-TO 30-FT INCLUSIVE. SPACING TO BE USED IS THAT WHICH PRODUCED MAXIMUM STRESSES.

DESIGN: HS 25 TRUCK

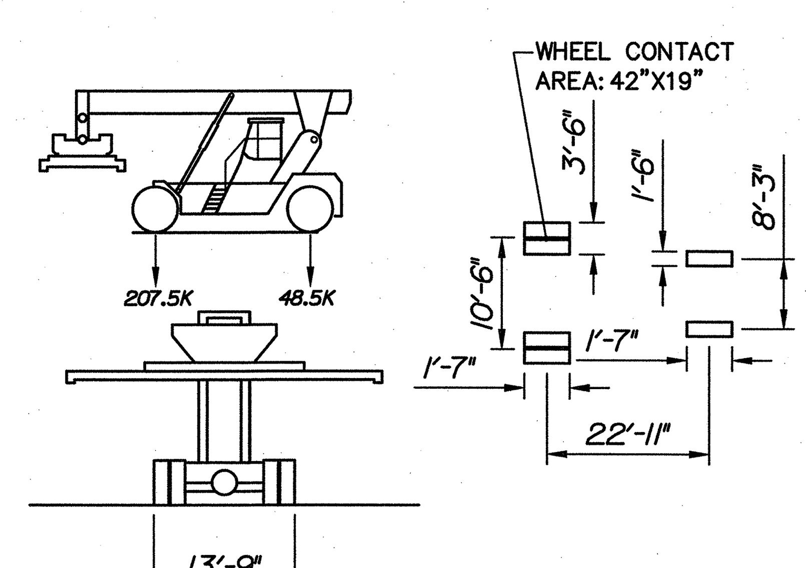

DESIGN: MI-JACK 50 RS
LOADED RAIL STACKER

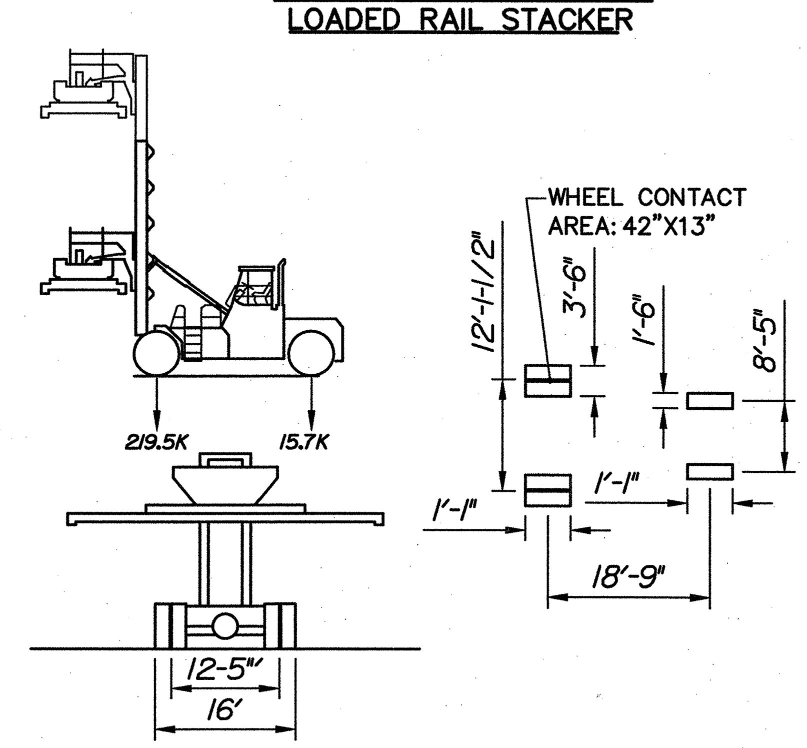

DESIGN: TAYLOR TEC-950L
LOADED CONTAINER HANDLER

LEGEND:

ℙ	PLATE
℄	CENTER LINE
#6	REINFORCING BAR SIZE
+ 12.22	SPOT ELEVATION (FEET)
	PROJECT BENCHMARK
	TEST BORINGS
	FIRE HYDRANT
	UNDERGROUND ELECTRIC BOX
	EXISTING LIGHT POLE
	PROPOSED LIGHT POLE
	HARDWOOD TREE
	SOFTWOOD TREE
Ⓢ	SANITARY MANHOLE
⋈	WATER GATE
	CATCH BASIN
Ⓓ	DRAIN MANHOLE
Ⓜ	MANHOLE
Ⓣ	TELEPHONE MANHOLE
Ⓔ	ELECTRICAL MANHOLE
—x—x—	EXISTING CHAIN LINK FENCE
—o—	PROPOSED CHAIN LINK FENCE
—□—□—	TEMPORARY CHAIN LINK FENCE
—JB—	JERSEY BARRIER WITH CHAIN LINK FENCE
—I—I—	GUARD RAIL
— OE —	OVERHEAD ELECTRIC
— E —	UNDERGROUND ELECTRIC
— SS —	SANITARY SEWER
— SD —	STORM DRAIN
— T —	TELEPHONE
— W —	WATER
— G —	GAS
— OHSS —	OVERHEAD SANITARY SEWER
— OHW —	OVERHEAD WATER
	CURBING
	RAILROAD TRACKS
	BEDROCK
	CONCRETE
	SAND
	STEEL

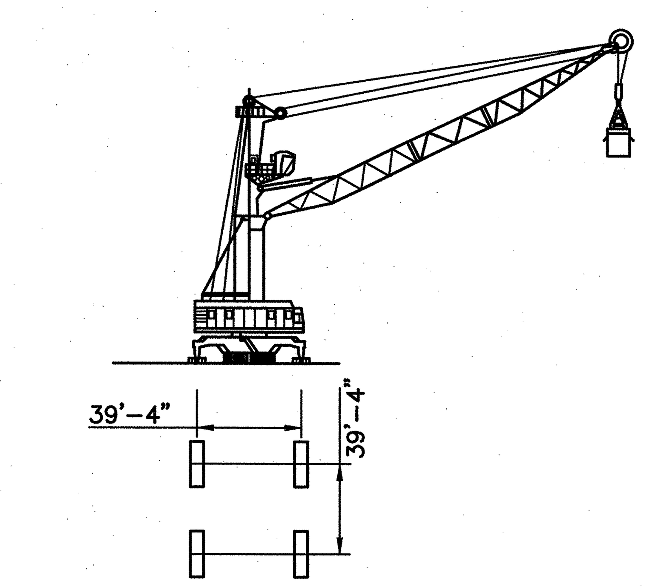

DESIGN: 100 TON MOBILE HARBOR CRANE
LIEBHERR LHM 320 (MODIFIED)

CORNERLOADS OF THE LHM320,
SUPPORTING BASE 48'X37'-4"

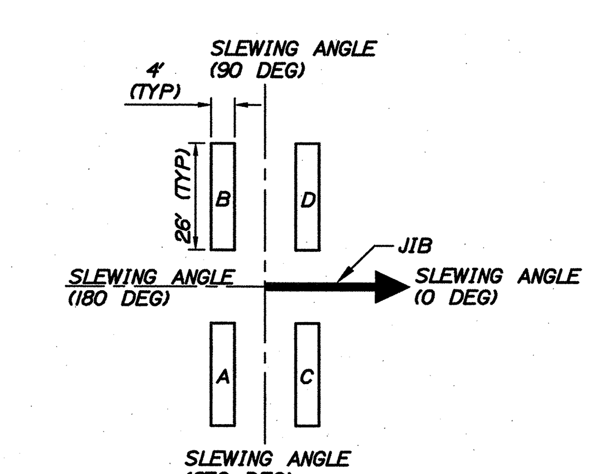

	JIB ANGLE (DEG)	MAX CORNERLOADS SUPPORT PAD A (LBS)	SUPPORT PAD B (LBS)	SUPPORT PAD C (LBS)	SUPPORT PAD D (LBS)
STATIC LOAD EXCL. WIND	0	36290	36290	414345	414345
	MAX (38)	40565	194000	293215	446656
	90	78023	372580	78024	372612
DYNAMIC LOAD EXCL. WIND	0	20328	20328	430307	430307
	MAX (38)	0	127207	254193	519850
	90	65585	385050	65585	385050

HNTB

STATE OF MAINE
DEPARTMENT OF TRANSPORTATION
PROJECT NUMBER 017820.00
PIN 017820.00

STATE OF MAINE ROLAND A. LAVALLEE No. 6452 LICENSED PROFESSIONAL ENGINEER

SIGNATURE
6452
P.E. NUMBER
3/28/11
DATE

	BY	DATE
PROJ. MANAGER CRAIG R. MORIN		
DESIGN-DETAILED CRM	HME	3/25/11
CHECKED-REVIEWED DGE	RAL	3/25/11
DESIGN2-DETAILED2 -	-	-
DESIGN3-DETAILED3 -	-	-
REVISIONS 1 -		-
REVISIONS 2 -		-
REVISIONS 3 -		-
REVISIONS 4 -		-
FIELD CHANGES -		-

PORTLAND INTERNATIONAL
MARINE TERMINAL IMPROVEMENTS
PORTLAND CUMBERLAND COUNTY

GENERAL NOTES AND DESIGN CRITERIA

SHEET NUMBER
G2

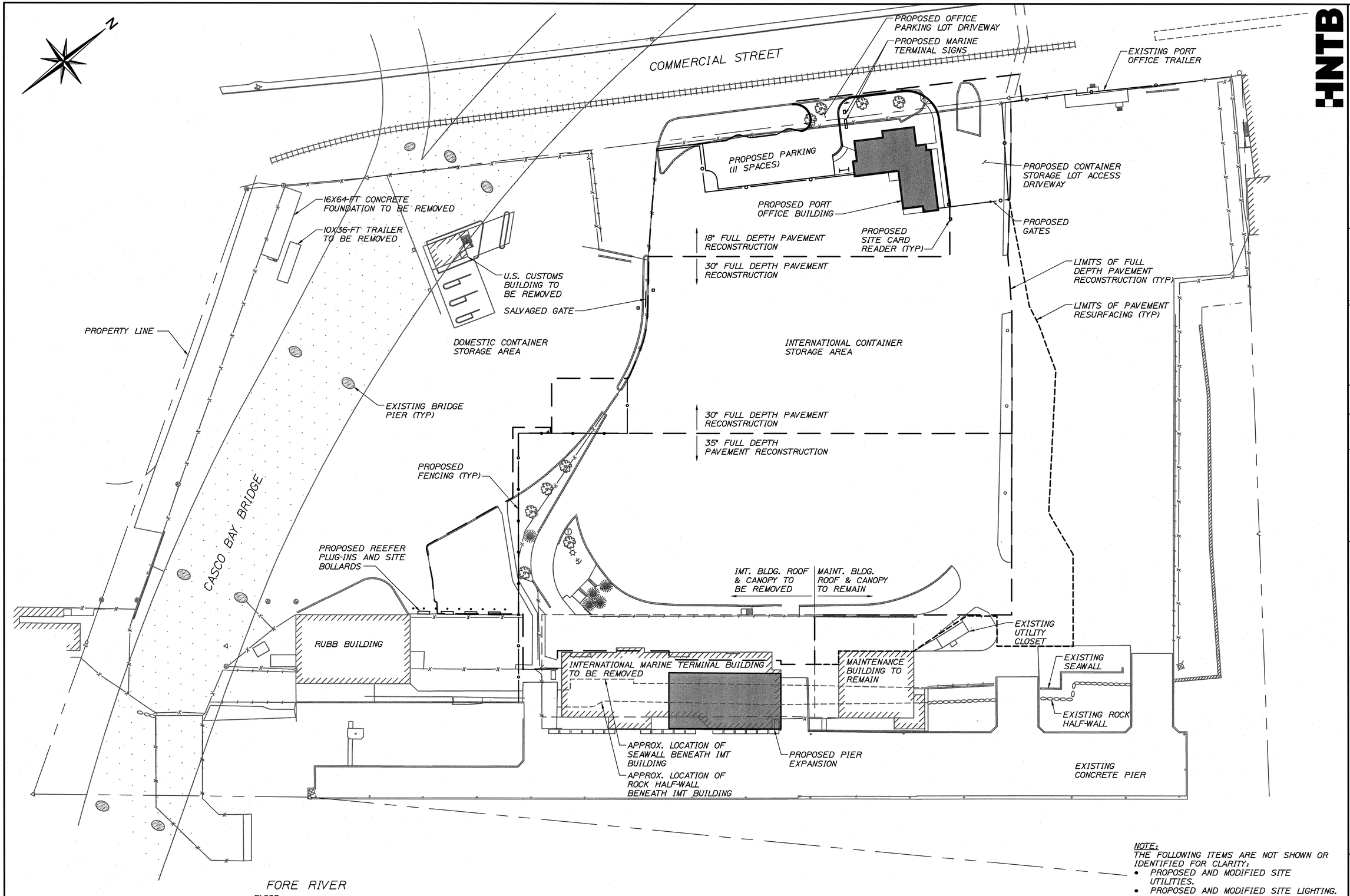

GENERAL PLAN
SCALE: 1"=40'-0"

NOTE:
THE FOLLOWING ITEMS ARE NOT SHOWN OR IDENTIFIED FOR CLARITY:

- PROPOSED AND MODIFIED SITE UTILITIES.
- PROPOSED AND MODIFIED SITE LIGHTING.
- PROPOSED AND MODIFIED SITE DRAINAGE SYSTEM.
- PROPOSED PIER APPROACH SLAB AND TIMBER DECK REPLACEMENT.
- PROPOSED PAVEMENT MARKINGS.

HNTB

STATE OF MAINE
DEPARTMENT OF TRANSPORTATION

PROJECT NUMBER 017820.00

PIN 017820.00

STATE OF MAINE
ROLAND A. LAVALLEE
No. 6452
LICENSED PROFESSIONAL ENGINEER

SIGNATURE
P.E. NUMBER 6452
DATE 3/25/11

PROJ. MANAGER	CRAIG R. MORIN	BY	DATE
DESIGN-DETAILED	HME	HME	3/25/11
CHECKED-REVIEWED	CRM	RAL	3/25/11
DESIGN-DETAILED2	-	-	-
DESIGN-DETAILED3	-	-	-
REVISIONS 1	-		-
REVISIONS 2	-		-
REVISIONS 3	-		-
REVISIONS 4	-		-
FIELD CHANGES	-		-

PORTLAND INTERNATIONAL
MARINE TERMINAL IMPROVEMENTS
PORTLAND CUMBERLAND COUNTY

GENERAL PLAN

SHEET NUMBER
G3

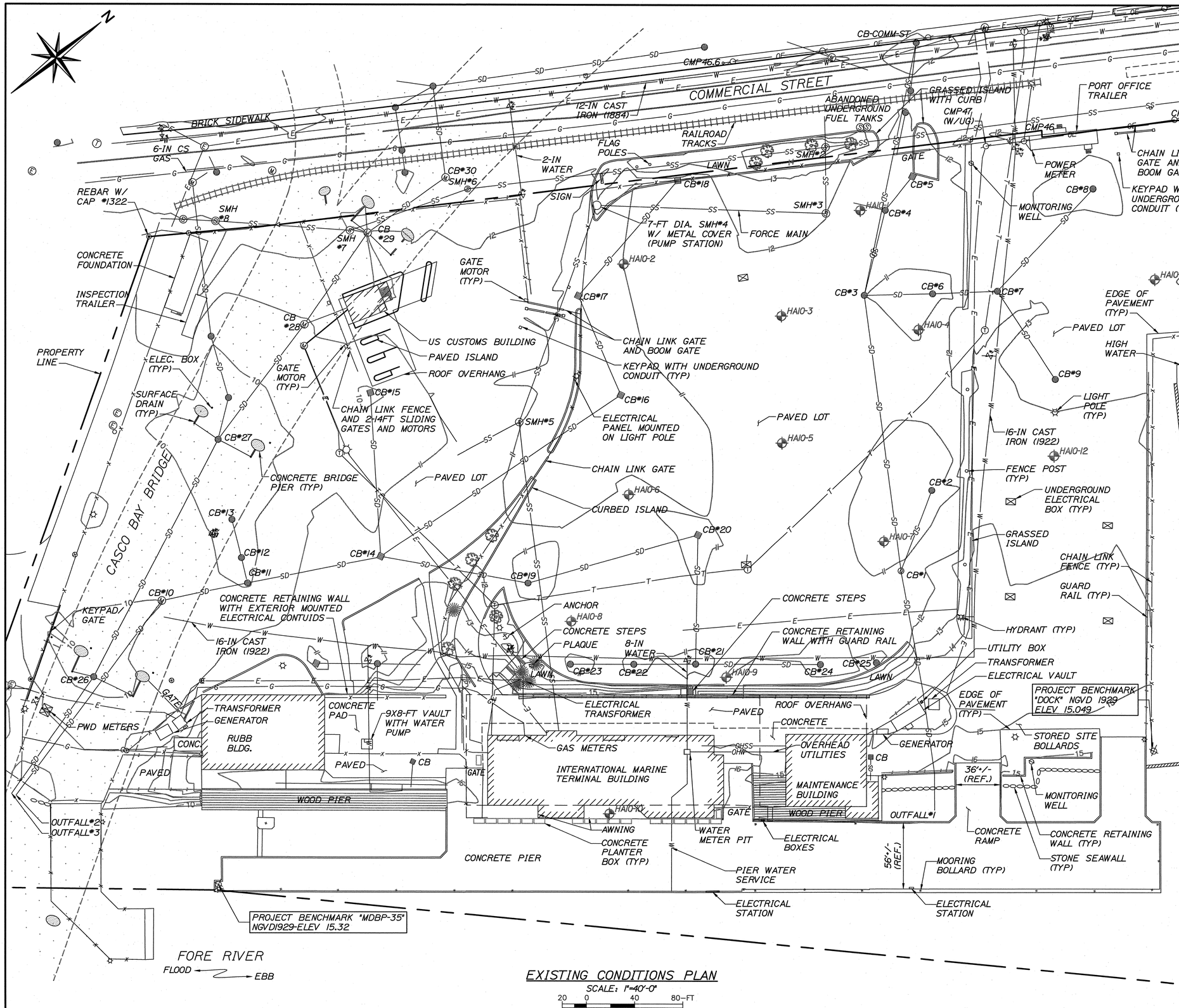

EXISTING CONDITIONS PLAN

SCALE: 1"=40'-0"

20 0 40 80—FT

HNTB

STATE OF MAINE
DEPARTMENT OF TRANSPORTATION

PROJECT NUMBER 017820.00

PIN 017820.00

NOTES:

1. BASE MAP PREPARED BY JAMES D. NADEAU, LLC OF PORTLAND, MAINE, REVISION DATE 12/17/10.

2. UNDERGROUND UTILITIES DEPICTED ARE BASED SOLELY ON VISIBLE SURFACE STRUCTURES. PAINT LINES MARKED BY UTILITY AND EXISTING DRAWINGS. NO GUARANTEE IS MADE THAT THE UNDERGROUND UTILITIES SHOWN COMPRISE ALL SUCH UTILITIES IN THE AREA, EITHER IN SERVICE OR ABANDONED. LOCATIONS ARE APPROXIMATE ONLY.

3. ELEVATIONS AND CONTOURS ARE BASED ON THE NATIONAL GEODETIC VERTICAL DATUM OF 1929 (NGVD29).

4. BASIS OF BEARINGS IS GRID NORTH BASED ON THE NORTH AMERICAN DATUM OF 1983 (NAD83).

5. THE LOCATION OF THE HIGH WATER LINE APPEARS TO RUN ALONG CONCRETE/STONE RETAINING WALLS LOCATED BELOW EXISTING DOCKS, CONTRACTOR SHALL VERIFY PRIOR TO CONSTRUCTION.

6. TEST BORINGS WERE PERFORMED IN NOVEMBER 2010 BY HALEY & ALDRICH, INC. (FILE NO 37272-000) AND WERE FIELD LOCATED BY JAMES D. NADEAU, LLC.

STORM DRAIN STRUCTURE TABLE

STRUCTURE	RIM	INV IN	FROM	INV OUT	TO	PIPE
OUTFALL#1	-	0.9	CB31	-	-	-
CB#1	11.1	5.4	CB#2/3	0.2	OUTFALL#1	15 PVC
CB#2	10.1	-	-	5.9	CB#1	12" PVC
CB#3	11.0	11.0	CB#4/6	2.0	CB#1	15" PVC
CB#4	11.4	6.7	CB#5	6.9	CB#3	8" PVC
CB#5	11.3	-	-	7.7	CB#4	8" PVC
CB#6	10.4	5.6	CB#7	5.2	CB#3	12" PVC
CB#7	12.2	7.2/8.2	CB#8/#9	6.1	CB#6	10" PVC
CB#8	11.4	-	-	7.7	CB#7	8" PVC
CB#9	12.3	-	-	8.7	CB#7	8" PVC
OUTFALL#2	-	1.1	CB#10	-	-	-
CB#10	10.0	4.3	CB#11	2.2	OUTFALL#2	24" RCP
CB#11	9.9	5.1	CB#12/14	5.0	CB#10	20" RCP
CB#12	9.7	5.2	CB#13	5.2	CB#11	12" PVC
CB#13	9.5	-	-	5.4	CB#12	12" PVC
CB#14	11.1	5.4	CB#15/16/19	5.4	CB#11	20" RCP
CB#15	9.8	-	-	5.6	CB#14	12" RCP
CB#16	10.5	5.9	CB#17	5.8	CB#14	15" RCP
CB#17	10.1	6.6	CB#18	6.5	CB#16	12" RCP
CB#18	11.6	-	-	UNK	CB#17	10" RCP
CB#19	10.6	5.7	CB#20	5.7	CB#14	12" RCP
CB#20	10.8	6.3	CB#21	6.2	CB#19	12" CMP
CB#21	10.7	7.5/7.7	CB#22/24	7.3	CB#20	12" CMP
CB#22	10.9	7.9	CB#23	8.0	CB#21	8" PVC
CB#23	10.8	-	-	8.4	CB#22	8" PVC
CB#24	10.7	-	-	8.4	CB#21	8" PVC
CB#25	10.8	-	-	8.4	UNK	8" PVC
OUTFALL#3	-	1.1	CB#26	-	-	-
CB#26	9.3	1.8	CB#27	1.8	OUTFALL#3	30" RCP
CB#27	9.1	3.7/2.9	CB#28	2.9	CB#26	30" RCP
CB#28	10.9	5.9/5.2	BLDG/CB#29	5.2	CB#27	30" RCP
CB#29	12.0	7.1	CB#30	7.1	CB#28	30" RCP
CB#30	12.3	3.3	CB	7.2	CB#29	30" RCP

SANITARY SEWER STRUCTURE TABLE

STRUCTURE	RIM	INV IN	FROM	INV OUT	TO	PIPE
SMH#1	13.1	UNK	SMH#2	UNK	UNK	UNK
SMH#2	14.3	5.8/4.3	SMH#3/6	1.9	SMH#1	UNK
SMH#3	12.0	6.9	SMH#4	6.4	SMH#2	8" PVC
SMH#4	(PUMP)	UNK	SMH#5	UNK	SMH#3	4" PVC (FM)
SMH#5	11.0	3.4/3.6	IMT/UNK	3.4	SMH#4	8" RCP
SMH#6	12.3	UNK	SMH#7	UNK	SMH#2	48" RCP
SMH#7	12.0	2.0	SMH#8	2.0	SMH#6	48" RCP
SMH#8	12.0	2.1	SMH	2.1	SMH#7	48" RCP

STATE OF MAINE
ROLAND A. LAVIOLETTE
No. 6462
LICENSED PROFESSIONAL ENGINEER

P.E. NUMBER

DATE

		BY	DATE
PROJ. MANAGER	CRAIG R. MORIN		
DESIGN-DETAILED	HME	HME	3/25/11
CHECKED-REVIEWED	CRM	RAL	3/25/11
DESIGN2-DETAILED2	-	-	-
DESIGN3-DETAILED3	-	-	-
REVISIONS 1	-	-	-
REVISIONS 2	-	-	-
REVISIONS 3	-	-	-
REVISIONS 4	-	-	-
FIELD CHANGES	-	-	-

PORTLAND INTERNATIONAL
MARINE TERMINAL IMPROVEMENTS
PORTLAND CUMBERLAND COUNTY

EXISTING CONDITIONS PLAN

SHEET NUMBER

C1

TEST BORING REPORT — HALEY & ALDRICH

Boring No. HA10-1

Project: Portland International Marine Terminal Improvements, Portland, Maine
Client: HNTB Corporation
Contractor: Maine Test Borings

File No. 37272-000
Sheet No. 1 of 2
Start: 15 November 2010
Finish: 15 November 2010
Driller: R. Leonard
H&A Rep.: M. Foley
Elevation: 11.5 (approx.)
Datum: NGVD 29
Location: See Plan

	Casing	Sampler	Barrel	Drilling Equipment and Procedures
Type	HW	S	-	Rig Make & Model: Mobile Drill B53
Inside Diameter (in.)	4.0	1.375	-	Bit Type: Roller Bit; Drill Mud: None
Hammer Weight (lb)	300	140	-	Casing: SSA to 5', HSA to 15.0', HW to 25.0'
Hammer Fall (in.)	16	30	-	Hoist/Hammer: Winch / Safety Hammer; PID Make & Model: N/A

Field Tests: Dilatancy: R - Rapid S - Slow N - None; Toughness: L - Low M - Medium H - High; Plasticity: N - Nonplastic L - Low M - Medium H - High; Dry Strength: N - None L - Low M - Medium H - High V - Very High

*Note: Maximum particle size is determined by direct observation within the limitations of sampler size.

Note: Soil identification based on visual-manual methods of the USCS as practiced by Haley & Aldrich, Inc.

Depth (ft)	Sampler Blows per 6 in.	Sample No. & Rec. (in.)	Sample Depth (ft)	Stratum Change Elev/Depth (ft)	USCS Symbol	VISUAL-MANUAL IDENTIFICATION AND DESCRIPTION (Density/consistency, color, GROUP NAME, max. particle size*, structure, odor, moisture, optional descriptions; GEOLOGIC INTERPRETATION)	% Coarse	% Fine	% Coarse	% Medium	% Fine	% Fines	Dilatancy	Toughness	Plasticity	Strength
0				11.2 / 0.2		-BITUMINOUS CONCRETE-										
	7 9 10 14	S1 18	0.5 2.5		SM	Medium dense, brown, silty SAND (SM), mps 0.75 in., no odor, moist	3	3	5	33	36	20				
				10.0 / 1.5	SW	-BASE/SUBBASE- Medium dense, dark brown, well graded SAND with gravel (SW), mps 0.75 in., no odor, moist, contains brick and wood fragments	20	5	15	55	5					
				9.0 / 2.5	SM	Medium dense, brown, silty SAND (SM), mps 1.25 in., no odor, moist	4	6	8	30	34	18				
	12 11 7 8	S2 18	2.5 4.5			-FILL-										
	5 6 6 9	S3 11	4.5 6.5		SW-SM	Medium dense, brown, well graded SAND with silt and gravel (SW-SM), mps 0.3 in., no odor, moist, rust-staining around schist gravel	15	5	10	60	10					
	7 9 8 10	S4 13	6.5 8.5		SW-SM	Medium dense, brown, well graded SAND with silt and gravel (SW-SM), mps 1.3 in., no odor, moist, rust-staining around schist gravel	25	10	15	40	10					
	5 3 13 25	S5 7	8.5 10.5		SM	Medium dense, brown, silty SAND with gravel (SM), mps 0.75 in., no odor, wet	30	5	25	25	15					
						-FILL-										
	6 2 7 5	S6A 4	10.5 12.5		SW	Loose, brown, well graded SAND with gravel (SM), mps 1.5 in., no odor, wet	25	10	20	40	5					
						Note: Advance roller bit through boulder from 12.5 to 13.0 ft.										
	14 22 23 23	S6B 11	13.0 15.0		SW	Dense, gray, well graded SAND with gravel (SW), mps 1.0 in., no odor, saturated, brick fragments in coarse sand	15	5	15	60	5					
						-FILL-										
	6 5 5 8	S7 13	15.0 17.0	-3.5 / 15.0	SP	Loose, gray, poorly graded SAND (SP), mps 0.3 in., no odor, wet	10	5	5	75	5					
				-4.5 / 16.0	SP-SW	Loose, brown, well graded SAND (SW), trace gravel, mps 0.2 in., no odor, wet	10	10	30	50						
	9 8 10 13	S8 8	17.0 19.0		SP	Medium dense, brown, poorly graded SAND with silt (SP), mps 2.0 mm, no odor, wet, thin (1 cm) layer of clay in the top of the spoon, thin (1.5 in.) layer of rust-stained sand at approximately 18.0 ft				15	75	10				
						-MARINE DEPOSIT- (Sand)										

Water Level Data

Date	Time	Elapsed Time (hr.)	Depth (ft) to: Bottom of Casing	Bottom of Hole	Water
11/15/10	1445	0	pulled	27.0	4.5

Sample ID: O - Open End Rod; T - Thin Wall Tube; U - Undisturbed Sample; S - Split Spoon Sample

Well Diagram: Riser Pipe, Screen, Filter Sand, Cuttings, Grout, Concrete, Bentonite Seal

Summary: Overburden (ft) 27.0; Rock Cored (ft) --; Samples 11S

Boring No. HA10-1

TEST BORING REPORT — HALEY & ALDRICH

Boring No. HA10-2

Project: Portland International Marine Terminal Improvements, Portland, Maine
Client: HNTB Corporation
Contractor: Maine Test Borings

File No. 37272-000
Sheet No. 1 of 1
Start: 18 November 2010
Finish: 18 November 2010
Driller: R. Leonard
H&A Rep.: M. Foley
Elevation: 11.0 (approx.)
Datum: NGVD 29
Location: See Plan

	Casing	Sampler	Barrel	Drilling Equipment and Procedures
Type	SSA	S	-	Rig Make & Model: Mobile Drill B53
Inside Diameter (in.)	-	1.375	-	Bit Type: Roller Bit; Drill Mud: None
Hammer Weight (lb)	-	140	-	Casing: SSA to 9.0'
Hammer Fall (in.)	-	30	-	Hoist/Hammer: Winch / Safety Hammer; PID Make & Model: N/A

Field Tests: Dilatancy: R - Rapid S - Slow N - None; Toughness: L - Low M - Medium H - High; Plasticity: N - Nonplastic L - Low M - Medium H - High; Dry Strength: N - None L - Low M - Medium H - High V - Very High

*Note: Maximum particle size is determined by direct observation within the limitations of sampler size.

Note: Soil identification based on visual-manual methods of the USCS as practiced by Haley & Aldrich, Inc.

Depth (ft)	Sampler Blows per 6 in.	Sample No. & Rec. (in.)	Sample Depth (ft)	Stratum Change Elev/Depth (ft)	USCS Symbol	VISUAL-MANUAL IDENTIFICATION AND DESCRIPTION (Density/consistency, color, GROUP NAME, max. particle size*, structure, odor, moisture, optional descriptions; GEOLOGIC INTERPRETATION)	% Coarse	% Fine	% Coarse	% Medium	% Fine	% Fines	Dilatancy	Toughness	Plasticity	Strength
0				10.8 / 0.2		-BITUMINOUS CONCRETE-										
					SW	Note: Cobble at 0.5 ft.										
	10 10 8 6	S1 15	1.0 3.0		SW	Medium dense, dark brown to brown at 2.0 ft, well graded SAND with gravel (SW), mps 0.75 in., no odor, dry to moist	25	15	15	45						
						-BASE/SUBBASE-										
	6 5 4 3	S2 18	3.0 5.0	7.9 / 3.1	SP	Loose, brown, poorly graded SAND (SP), mps 0.42 mm, no odor, moist, frequent 0.5 in. thick horizontal layers of black sand			20	80						
	2 1 3 2	S3 22	5.0 7.0		SP	Loose, brown, poorly graded SAND (SP), mps 0.3 in., no odor, moist, dark brown layers from 5.0 to 5.5 ft	5		20	75						
						-FILL-										
	2 1 2 2	S4 22	7.0 9.0	4.0 / 7.0	SW	Very loose, brown, well graded SAND (SW), mps 4.0 mm, no odor, wet		15	25	60						
						-MARINE DEPOSIT- (Sand)										
	1 1 1 2	S5 21	9.0 11.0		SW	Very loose, brown, well graded SAND (SW), mps 1.0 in., no odor, wet	5	15	30	50						
				0.0 / 11.0		Bottom of Exploration 11.0 ft										

Water Level Data

Date	Time	Elapsed Time (hr.)	Depth (ft) to: Bottom of Casing	Bottom of Hole	Water

Sample ID: O - Open End Rod; T - Thin Wall Tube; U - Undisturbed Sample; S - Split Spoon Sample

Well Diagram: Riser Pipe, Screen, Filter Sand, Cuttings, Grout, Concrete, Bentonite Seal

Summary: Overburden (ft) 11.0; Rock Cored (ft) --; Samples 5S

Boring No. HA10-2

TEST BORING REPORT — HALEY & ALDRICH

Boring No. HA10-4

Project: Portland International Marine Terminal Improvements, Portland, Maine
Client: HNTB Corporation
Contractor: Maine Test Borings

File No. 37272-000
Sheet No. 1 of 1
Start: 18 November 2010
Finish: 18 November 2010
Driller: R. Leonard
H&A Rep.: M. Foley
Elevation: 11.0 (approx.)
Datum: NGVD 29
Location: See Plan

	Casing	Sampler	Barrel	Drilling Equipment and Procedures
Type	SSA	S	-	Rig Make & Model: Mobile Drill B53
Inside Diameter (in.)	-	1.375	-	Bit Type: Roller Bit; Drill Mud: None
Hammer Weight (lb)	-	140	-	Casing: SSA to 8.5'
Hammer Fall (in.)	-	30	-	Hoist/Hammer: Winch / Safety Hammer; PID Make & Model: N/A

Field Tests: Dilatancy: R - Rapid S - Slow N - None; Toughness: L - Low M - Medium H - High; Plasticity: N - Nonplastic L - Low M - Medium H - High; Dry Strength: N - None L - Low M - Medium H - High V - Very High

*Note: Maximum particle size is determined by direct observation within the limitations of sampler size.

Note: Soil identification based on visual-manual methods of the USCS as practiced by Haley & Aldrich, Inc.

Depth (ft)	Sampler Blows per 6 in.	Sample No. & Rec. (in.)	Sample Depth (ft)	Stratum Change Elev/Depth (ft)	USCS Symbol	VISUAL-MANUAL IDENTIFICATION AND DESCRIPTION (Density/consistency, color, GROUP NAME, max. particle size*, structure, odor, moisture, optional descriptions; GEOLOGIC INTERPRETATION)	% Coarse	% Fine	% Coarse	% Medium	% Fine	% Fines	Dilatancy	Toughness	Plasticity	Strength
0				10.7 / 0.3		-BITUMINOUS CONCRETE-										
	14 21 16 19	S1 19	0.5 2.5	10.0 / 1.0	SW	Dense, brown, well graded SAND with gravel (SW), mps 2.0 in., no odor, dry to damp	25	15	15	45						
					SP	-BASE/SUBBASE- Dense, black, poorly graded SAND with gravel (SP), mps 2.0 in., no odor, dry to moist, contains coal	30	5	10	55						
	12 16 12 12	S2 17	2.5 4.5		SW	Medium dense, brown to dark brown, well graded SAND with silt and gravel (SW), mps 1.0 in., no odor, moist, contains coal and large wood fragments	15	10	15	50	10					
						-FILL-										
	7 6 5 5	S3 5	4.5 6.5		SW	Medium dense, dark brown, well graded SAND with silt and gravel (SW), mps 0.8 in., no odor, moist, contains wood fragments	15	10	10	55	10					
	5 7 4 4	S4 7	6.5 8.5		SW	Medium dense, brown, well graded SAND with gravel (SW), mps 1.0 in., no odor, moist	25	15	10	50						
	5 1 2 2	S5 24	8.5 10.5		SM	Very loose, brown, silty SAND (SM), mps 0.5 in., no odor, saturated	5		10	70	15					
				1.0 / 10.0	CL	Soft, brown, sandy CLAY (CL), mps 0.47 mm, no odor, saturated; -MARINE DEPOSIT- (Clay)				30	70					
				0.5 / 10.5		Bottom of Exploration 10.5 ft										

Water Level Data

Date	Time	Elapsed Time (hr.)	Depth (ft) to: Bottom of Casing	Bottom of Hole	Water

Sample ID: O - Open End Rod; T - Thin Wall Tube; U - Undisturbed Sample; S - Split Spoon Sample

Well Diagram: Riser Pipe, Screen, Filter Sand, Cuttings, Grout, Concrete, Bentonite Seal

Summary: Overburden (ft) 10.5; Rock Cored (ft) --; Samples 5S

Boring No. HA10-4

TEST BORING REPORT — HALEY & ALDRICH

Boring No. HA10-1
File No. 37272-000
Sheet No. 2 of 2

Depth (ft)	Sampler Blows per 6 in.	Sample No. & Rec. (in.)	Sample Depth (ft)	Stratum Change Elev/Depth (ft)	USCS Symbol	VISUAL-MANUAL IDENTIFICATION AND DESCRIPTION (Density/consistency, color, GROUP NAME, max. particle size*, structure, odor, moisture, optional descriptions; GEOLOGIC INTERPRETATION)	% Coarse	% Fine	% Coarse	% Medium	% Fine	% Fines	Dilatancy	Toughness	Plasticity	Strength
20	7 11 15 16	S9 11	20.0 22.0		SP	Medium dense, brown, poorly graded SAND (SP), mps 2.0 mm, no odor, wet, thin (0.75 in.) layer of rust-stained sand at bottom of spoon				25	75					
						-MARINE DEPOSIT- (Sand)										
25	7 8 9 10	S10 11	25.0 27.0		SP	Medium dense, brown, poorly graded SAND (SP), mps 2.0 mm, no odor, wet				25	75					
				-15.5 / 27.0		Bottom of Exploration 27.0 ft										

NOTE: Soil identification based on visual-manual methods of the USCS as practiced by Haley & Aldrich, Inc.

Boring No. HA10-1

TEST BORING REPORT — HALEY & ALDRICH

Boring No. HA10-3

Project: Portland International Marine Terminal Improvements, Portland, Maine
Client: HNTB Corporation
Contractor: Maine Test Borings

File No. 37272-000
Sheet No. 1 of 1
Start: 18 November 2010
Finish: 18 November 2010
Driller: R. Leonard
H&A Rep.: M. Foley
Elevation: 11.5 (approx.)
Datum: NGVD 29
Location: See Plan

	Casing	Sampler	Barrel	Drilling Equipment and Procedures
Type	SSA	S	-	Rig Make & Model: Mobile Drill B53
Inside Diameter (in.)	-	1.375	-	Bit Type: Roller Bit; Drill Mud: None
Hammer Weight (lb)	-	140	-	Casing: SSA to 8.5'
Hammer Fall (in.)	-	30	-	Hoist/Hammer: Winch / Safety Hammer; PID Make & Model: N/A

Field Tests: Dilatancy: R - Rapid S - Slow N - None; Toughness: L - Low M - Medium H - High; Plasticity: N - Nonplastic L - Low M - Medium H - High; Dry Strength: N - None L - Low M - Medium H - High V - Very High

*Note: Maximum particle size is determined by direct observation within the limitations of sampler size.

Note: Soil identification based on visual-manual methods of the USCS as practiced by Haley & Aldrich, Inc.

Depth (ft)	Sampler Blows per 6 in.	Sample No. & Rec. (in.)	Sample Depth (ft)	Stratum Change Elev/Depth (ft)	USCS Symbol	VISUAL-MANUAL IDENTIFICATION AND DESCRIPTION (Density/consistency, color, GROUP NAME, max. particle size*, structure, odor, moisture, optional descriptions; GEOLOGIC INTERPRETATION)	% Coarse	% Fine	% Coarse	% Medium	% Fine	% Fines	Dilatancy	Toughness	Plasticity	Strength
0				11.1 / 0.2		-BITUMINOUS CONCRETE-										
					SW	Very dense, brown, well graded SAND with gravel (SW), mps 0.75 in., no odor, dry to moist	25	10	15	50						
	12 24 50/0"	S1 14	0.5 1.8	10.5 / 1.0	SP	-BASE/SUBBASE- Dense, black, poorly graded SAND with gravel (SP), mps 1.3 in., no odor, dry to moist, brick and coal fragments	15	10	10	60	5					
	8 14 9 11	S2 8	2.5 4.5		SP	Note: Augered through boulder from approximately 1.8 to 2.5 ft. Medium dense, black, poorly graded SAND with gravel (SP), mps 1.0 in., no odor, dry to moist, 0.5 in. ash layer, brick and coal fragments	15	10	10	65						
5	5 5 4 6	S3 16	4.5 6.5		SW	Loose, dark brown to black, well graded SAND with gravel (SW), mps 1.0 in., no odor, dry, contains ash and coal	20	15	25	40						
	3 2 3 3	S4 4	6.5 8.5		SP	Loose, dark brown to black, poorly graded SAND with gravel (SP), mps 0.3 in., no odor, dry	15	10	10	65						
						-FILL-										
10	1 1 2 4	S5 5	8.5 10.5		SP	Very loose, black, poorly graded SAND with gravel (SP), mps 0.7 in., no odor, moist to wet	20	10	10	60						
				1.0 / 10.5		Bottom of Exploration 10.5 ft										

Water Level Data

Date	Time	Elapsed Time (hr.)	Depth (ft) to: Bottom of Casing	Bottom of Hole	Water

Sample ID: O - Open End Rod; T - Thin Wall Tube; U - Undisturbed Sample; S - Split Spoon Sample

Well Diagram: Riser Pipe, Screen, Filter Sand, Cuttings, Grout, Concrete, Bentonite Seal

Summary: Overburden (ft) 10.5; Rock Cored (ft) --; Samples 5S

Boring No. HA10-3

GEOTECHNICAL NOTES: (APPLICABLE TO SHEETS C2, C3 AND C4)

1. SOIL CLASSIFICATION, PROPERTIES AND DESCRIPTIONS ARE BASED ON ENGINEERING INTERPRETATION OF AVAILABLE SUBSURFACE INFORMATION BY HALEY & ALDRICH, INC. AND MAY NOT NECESSARILY REFLECT ACTUAL VARIATIONS IN SUBSURFACE CONDITIONS THAT MAY BE ENCOUNTERED BETWEEN INDIVIDUAL BORINGS OR SAMPLE LOCATIONS.

2. OBSERVED WATER LEVELS AND/OR WATER CONDITIONS INDICATED ARE AS RECORDED AT THE TIME OF EXPLORATION AND MAY VARY ACCORDING TO THE PREVAILING RAINFALL, METHODS OF EXPLORATION, AND OTHER FACTORS.

3. SOUND ENGINEERING JUDGMENT WAS EXERCISED IN PREPARING THE SUBSURFACE INFORMATION PRESENTED HEREIN. ANALYSIS AND INTERPRETATION OF SUBSURFACE DATA WAS PERFORMED AND INTENDED FOR AUTHORITY DESIGN AND ESTIMATE PURPOSES ONLY. PRESENTATION OF THE INFORMATION ON THESE PLANS OR ELSEWHERE IS FOR THE PURPOSE OF PROVIDING INTENDED USERS WITH ACCESS TO THE SAME DATA AVAILABLE TO THE AUTHORITY. THE SUBSURFACE INFORMATION IS PRESENTED IN GOOD FAITH AND IS NOT INTENDED AS A SUBSTITUTE FOR ADDITIONAL EXPLORATIONS, INDEPENDENT INTERPRETATIONS, INDEPENDENT ANALYSIS OR JUDGMENT BY THE CONTRACTOR.

4. THE SUBSURFACE EXPLORATIONS SHOWN HEREIN WERE MADE BETWEEN NOVEMBER 15, 2010 AND NOVEMBER 18, 2010 BY HALEY & ALDRICH, INC. ALL BORINGS WERE PERFORMED BY MAINE TEST BORINGS.

5. BORINGS ARE FOR THE PURPOSE OF DESIGN AND SHOW SOIL CONDITIONS AT BORING LOCATIONS ONLY, AND DO NOT NECESSARILY SHOW THE NATURE AND EXTENT OF THE MATERIALS TO BE ENCOUNTERED DURING CONSTRUCTION. ACTUAL SUBSURFACE CONDITIONS WILL VARY.

6. ELEVATIONS SHOWN ON TEST BORING LOGS ARE APPROXIMATE AND REFERENCE THE NATIONAL GEODETIC VERTICAL DATUM OF 1929 (NGVD29).

7. BORING STATION AND OFFSET INFORMATION IS BASED ON THE CONSTRUCTION BASELINE BETWEEN STEEL REBAR LOCATED AT THE PROPERTY CORNERS. SEE SITE PLAN SHEET C16 FOR LAYOUT.

8. GRID NORTH ON THE NORTH AMERICAN DATUM 1983 (NAD83).

BORING NO.	STATION	OFFSET (RT)
HA10-1	5+89.5	46.3'
HA10-2	3+89.2	67.6'
HA10-3	5+17.7	125.8'
HA10-4	6+27.3	150.4'

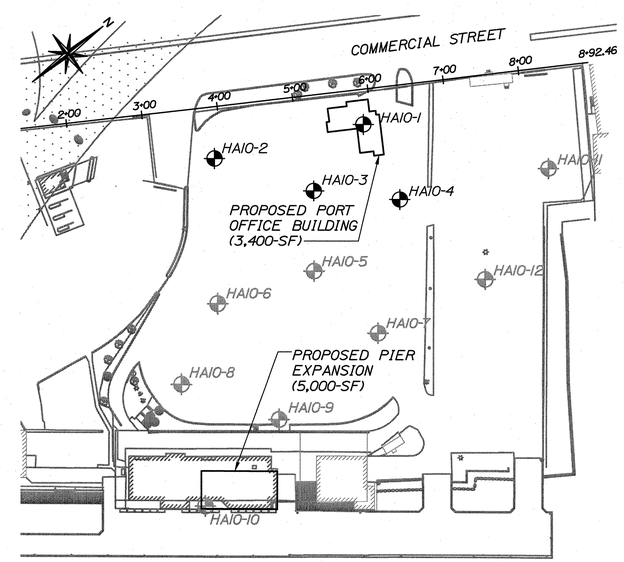

BORING PLAN
SCALE: 1"=100'-0"

HALEY & ALDRICH

STATE OF MAINE
DEPARTMENT OF TRANSPORTATION

PROJECT NUMBER 017820.00

PIN 017820.00

	BY	DATE
PROJ. MANAGER	CRAIG R. MORIN	
DESIGN-DETAILED	HME	3/25/11
CHECKED-REVIEWED	EFW	3/25/11
DESIGN2-DETAILED2	-	-
DESIGN3-DETAILED3	-	-
REVISIONS 1	-	-
REVISIONS 2	-	-
REVISIONS 3	-	-
REVISIONS 4	-	-
FIELD CHANGES	-	-

STATE OF MAINE — WAYNE A. CHADBOURNE — No. 10620 — LICENSED PROFESSIONAL ENGINEER

SIGNATURE

P.E. NUMBER 9/22/2011

DATE

PORTLAND INTERNATIONAL MARINE TERMINAL IMPROVEMENTS
PORTLAND CUMBERLAND COUNTY

BORING LOGS I

SHEET NUMBER C2

TEST BORING REPORT

HALEY & ALDRICH

Project	Portland International Marine Terminal Improvements, Portland, Maine
Client	HNTB Corporation
Contractor	Maine Test Borings

Boring No.	HA10-5
File No.	37272-000
Sheet No.	1 of 2
Start	15 November 2010
Finish	16 November 2010
Driller	R. Leonard
H&A Rep.	M. Foley
Elevation	11.5 (approx.)
Datum	NGVD 29
Location	See Plan

	Casing	Sampler	Barrel	Drilling Equipment and Procedures
Type	HW	S	-	Rig Make & Model: Mobile Drill B53
Inside Diameter (in.)	4.0	1.375	-	Bit Type: Roller Bit; Drill Mud: None
Hammer Weight (lb)	300	140	-	Casing: SSA to 8.5', HW to 24.0'
Hammer Fall (in.)	16	30	-	Hoist/Hammer: Winch / Safety Hammer; PID Make & Model: N/A

Depth (ft)	Sampler Blows per 6 in.	Sample No. & Rec. (in.)	Sample Depth (ft)	Stratum Change Elev/Depth (ft)	USCS Symbol	VISUAL-MANUAL IDENTIFICATION AND DESCRIPTION (Density/consistency, color, GROUP NAME, max. particle size*, structure, odor, moisture, optional descriptions; GEOLOGIC INTERPRETATION)	Gravel % Coarse	Gravel % Fine	Sand % Coarse	Sand % Medium	Sand % Fine	Sand % Fines	Field Test Distancy	Field Test Toughness	Field Test Plasticity	Field Test Strength
0				11.2 / 0.2		-BITUMINOUS CONCRETE-										
	14 24 14 13	S1 14	0.5 2.5	10.0 / 1.5	SW	Dense, brown, well graded SAND with gravel (SW), mps 2.0 in., no odor, moist	20	10	15	55						
					SW	-BASE/SUBBASE-	25	20	15	40						
	9 6 12 15	S2 18	2.5 4.5	8.5 / 3.0	SW / SP	Dense, dark brown to black, well graded SAND with gravel (SW), mps 1.75 in., no odor, moist, contains ash and brick fragments and coal; Medium dense, dark brown to black, well graded SAND with gravel (SW), mps 1.75 in., no odor, moist, contains ash and brick fragments and coal			85	15						
				7.5 / 4.0	SW	Medium dense, dark brown, silty SAND (SP), mps 0.42 mm, no odor, moist	30	15	15	40						
	14 6 6 5	S3 14	4.5 6.5	7.0 / 4.5	SP	Medium dense, brown, well graded SAND with gravel (SW), mps 1.5 in., no odor, moist; Medium dense, light brown, poorly graded SAND (SP), mps 0.42 mm, no odor, moist				100						
				5.0 / 6.5		-FILL-										
	4 5 5 4	S4 24	6.5 8.5		SM	Loose, light brown, silty SAND (SM), mps 0.42 mm, no odor, moist				75	25					
	1 3 4 4	S5 10	8.5 10.5		SM	Loose, light brown, silty SAND (SM), mps 0.42 mm, no odor, wet				10	75	15				
				1.5 / 10.0	SP	Loose, brown, poorly graded SAND (SP), mps 4.75 mm, no odor, wet		10	60	30						
	1 3 3 2	S6 7	10.5 12.5	1.0 / 10.5	SP	Loose, brown, poorly graded SAND (SP), mps 0.75 in., no odor, wet		10	65	25						
						-FILL-										
	2 1 2 2	S7 24	12.5 14.5	1.0 / 12.5	CL	Soft, gray, lean CLAY (CL), mps 0.075 mm, no odor, wet				100						
		U1 18.5	14.5 16.5			U1 (14.5-16.5 ft) Recovery = 18.5 in.										
	2 1 WOH 2	S8 24	17.0 19.0		OL/OH	Note: Unable to advance vane through soil from 16.5 to 17.5 ft. Very soft, gray, ORGANIC SILT with sand (OL/OH), mps 4.0 mm, strong organic odor, wet, shell and wood fragments -HARBOR BOTTOM DEPOSIT-		5	5	30	60					
	WOH WOH	S9 24	19.0 21.0		SC/OL/OH	Very loose, gray, clayey SAND and ORGANIC SILT (SC/OL/OH), mps 1.0 in., organic odor, wet, contains shell and wood fragments and fibrous	5	5	10	55	35					

Water Level Data

Date	Time	Elapsed Time (hr.)	Depth (ft) to: Bottom of Casing	Bottom of Hole	Water

Sample ID: O - Open End Rod; T - Thin Wall Tube; U - Undisturbed Sample; S - Split Spoon Sample

Well Diagram: Riser Pipe; Screen; Filter Sand; Cuttings; Grout; Concrete; Bentonite Seal

Summary: Overburden (ft) 26.0; Rock Cored (ft) --; Samples 10S, 1U

Boring No. HA10-5

Field Tests: Dilatancy: R - Rapid S - Slow N - None; Plasticity: N - Nonplastic L - Low M - Medium H - High; Toughness: L - Low M - Medium H - High; Dry Strength: N - None L - Low M - Medium H - High V - Very High

*Note: Maximum particle size is determined by direct observation within the limitations of sampler size.

Note: Soil identification based on visual-manual methods of the USCS as practiced by Haley & Aldrich, Inc.

TEST BORING REPORT

HALEY & ALDRICH

Project	Portland International Marine Terminal Improvements, Portland, Maine
Client	HNTB Corporation
Contractor	Maine Test Borings

Boring No.	HA10-6
File No.	37272-000
Sheet No.	1 of 1
Start	18 November 2010
Finish	18 November 2010
Driller	R. Leonard
H&A Rep.	M. Foley
Elevation	11.0 (approx.)
Datum	NGVD 29
Location	See Plan

	Casing	Sampler	Barrel	Drilling Equipment and Procedures
Type	SSA	S	-	Rig Make & Model: Mobile Drill B53
Inside Diameter (in.)	-	1.375	-	Bit Type: Roller Bit; Drill Mud: None
Hammer Weight (lb)	-	140	-	Casing: SSA to 10.5'
Hammer Fall (in.)	-	30	-	Hoist/Hammer: Winch / Safety Hammer; PID Make & Model: N/A

Depth (ft)	Sampler Blows per 6 in.	Sample No. & Rec. (in.)	Sample Depth (ft)	Stratum Change Elev/Depth (ft)	USCS Symbol	VISUAL-MANUAL IDENTIFICATION AND DESCRIPTION (Density/consistency, color, GROUP NAME, max. particle size*, structure, odor, moisture, optional descriptions; GEOLOGIC INTERPRETATION)	Gravel % Coarse	Gravel % Fine	Sand % Coarse	Sand % Medium	Sand % Fine	Sand % Fines	Field Test Distancy	Field Test Toughness	Field Test Plasticity	Field Test Strength
0				10.7 / 0.3		-BITUMINOUS CONCRETE-										
	10 16 14 14	S1 17	0.5 2.5	9.5 / 1.5	SW	Medium dense, brown, well graded SAND with gravel (SW), mps 0.75 in., no odor, dry	20	15	15	50						
					SW	-BASE/SUBBASE-	15	10	15	60						
	14 13 15 10	S2 18	2.5 4.5	8.5 / 2.5	SW	Medium dense, brown to black, well graded SAND with gravel (SW), mps 0.75 in., no odor, dry, contains brick fragments, ash and wood; Medium dense, brown, well graded SAND with gravel (SW), mps 1.3 in., no odor, dry	20	15	15	45	5					
						-FILL-										
	4 3 3 3	S3 24	4.5 6.5	5.0 / 5.0	SW / SP	Loose, brown, well graded SAND with gravel (SW), mps 1.0 in., no odor, dry; Loose, light brown, poorly graded SAND (SP), mps 0.42 mm, no odor, moist, 1-4 in. layers of iron staining	20	15	15	50						
				4.9 / 6.1	CL	Medium stiff, gray, sandy lean CLAY (CL), mps 0.42 mm, no odor, moist, iron staining				30	70					
	1 1 1 2	S4 23	6.5 8.5	4.5 / 6.5		Very soft, olive-brown, lean CLAY (CL), with fine sand layers, organics, mps 0.42 mm, no odor, wet, mottled -MARINE DEPOSIT- (Clay)				30	70					
	1 2 2 2	S5 24	8.5 10.5		CL	Soft, olive-brown, lean CLAY (CL), with fine sand layers, mps 0.42 mm, no odor, wet				30	70					
	2 2 1 1	S6 23	10.5 12.5		CL/SP	Soft, olive-brown, lean CLAY (CL), alternating with loose, brown, poorly graded SAND (SP), mps 0.42 mm, no odor, wet, gray clay in bottom of sampler				50	50					
				1.5 / 12.5		-Bottom of Exploration 12.5 ft										

Water Level Data

Date	Time	Elapsed Time (hr.)	Depth (ft) to: Bottom of Casing	Bottom of Hole	Water

Sample ID: O - Open End Rod; T - Thin Wall Tube; U - Undisturbed Sample; S - Split Spoon Sample

Well Diagram: Riser Pipe; Screen; Filter Sand; Cuttings; Grout; Concrete; Bentonite Seal

Summary: Overburden (ft) 12.5; Rock Cored (ft) --; Samples 6S

Boring No. HA10-6

Field Tests: Dilatancy: R - Rapid S - Slow N - None; Plasticity: N - Nonplastic L - Low M - Medium H - High; Toughness: L - Low M - Medium H - High; Dry Strength: N - None L - Low M - Medium H - High V - Very High

*Note: Maximum particle size is determined by direct observation within the limitations of sampler size.

Note: Soil identification based on visual-manual methods of the USCS as practiced by Haley & Aldrich, Inc.

TEST BORING REPORT

HALEY & ALDRICH

Project	Portland International Marine Terminal Improvements, Portland, Maine
Client	HNTB Corporation
Contractor	Maine Test Borings

Boring No.	HA10-9
File No.	37272-000
Sheet No.	1 of 2
Start	16 November 2010
Finish	16 November 2010
Driller	R. Leonard
H&A Rep.	M. Foley
Elevation	11.5 (approx.)
Datum	NGVD 29
Location	See Plan

	Casing	Sampler	Barrel	Drilling Equipment and Procedures
Type	NW	S	-	Rig Make & Model: Mobile Drill B53
Inside Diameter (in.)	3.0	1.375	-	Bit Type: Roller Bit; Drill Mud: None
Hammer Weight (lb)	300	140	-	Casing: SSA to 10', NW to 42.0'
Hammer Fall (in.)	16	30	-	Hoist/Hammer: Winch / Safety Hammer; PID Make & Model: N/A

Depth (ft)	Sampler Blows per 6 in.	Sample No. & Rec. (in.)	Sample Depth (ft)	Stratum Change Elev/Depth (ft)	USCS Symbol	VISUAL-MANUAL IDENTIFICATION AND DESCRIPTION (Density/consistency, color, GROUP NAME, max. particle size*, structure, odor, moisture, optional descriptions; GEOLOGIC INTERPRETATION)	Gravel % Coarse	Gravel % Fine	Sand % Coarse	Sand % Medium	Sand % Fine	Sand % Fines	Field Test Distancy	Field Test Toughness	Field Test Plasticity	Field Test Strength
0				11.2 / 0.3		-BITUMINOUS CONCRETE-										
	10 15 14 12	S1 9	0.5 2.5	10.0 / 1.5	SW	Medium dense, brown, well graded SAND with gravel (SW), mps 1.3 in., no odor, moist	35	5	20	40						
					SW	-BASE/SUBBASE-	20	5	10	65						
	6 4 4 5	S2 8	2.5 4.5		SW	Medium dense, black, well graded SAND with gravel (SW), mps 1.3 in., no odor, moist, brick fragments in tip, coal and brick fragments; Loose, brown, well graded SAND with gravel (SW), mps 1.3 in., no odor, moist, abundant brick fragments	20	15	25	40						
	1 2 4 50/1"	S3 4	4.5 5.5		SW	Very loose, brown, well graded SAND with gravel (SW), mps 1.3 in., no odor, moist, abundant brick fragments	20	15	25	40						
	4 5 3 3	S4 16	6.5 8.5		SW	Loose, brown, well graded SAND with gravel (SW), mps 1.0 in., no odor, moist, abundant brick fragments, 2 in. dark brown fill in tip of spoon	20	15	25	35	5					
	2 1 2 14	S5 5	8.5 10.5		SW	Very loose, brown, well graded SAND (SW), mps 0.75 in., no odor, wet -FILL-	15	10	25	50						
						Note: Roller coned through cobble from 10.5 to 11.0 ft.										
	8 5 2 1	S6 7	11.0 13.0		SW	Loose, brown, well graded SAND (SW), mps 0.5 in., no odor, wet, contains abundant brick fragments	10	25	15	50						
	2 1 1 1	S7 14	13.0 15.0	-1.5 / 13.0	CL	Very soft, gray, sandy CLAY (CL), mps 0.42 mm, organic odor, wet, contains shell fragments -HARBOR BOTTOM DEPOSIT-				35	65					
	WOH 1 6 4	S8 15	15.0 17.0		OL/OH	Note: Attempted vane shear test at 15.0 ft, unable to push to full depth of test.				15	85					
				4.5 / 16.0	CL / SP	Very soft, gray, ORGANIC SILT with clay and sand (OL/OH/CL), mps 0.42 mm, organic odor, wet, contains shell fragments			10	40	45	3				
	4 5 3 5	S9 18	17.0 19.0		SM	Loose, gray, poorly graded SAND (SP), mps 4.0 mm, organic odor, wet, contains brick and shell fragments; Loose, gray, silty SAND (SM), mps 4.0 mm, strong organic odor, wet -HARBOR BOTTOM DEPOSIT-	5	5	15	55	20					
	2 1 1 14	S10 14	19.0 21.0	-7.5 / 19.0	SM/ML	Very loose, gray, silty SAND (SM) to sandy SILT with organics (ML), mps 4.0 mm, strong organic odor, wet, contains shell and wood fragments				55	45					

Water Level Data

Date	Time	Elapsed Time (hr.)	Depth (ft) to: Bottom of Casing	Bottom of Hole	Water

Sample ID: O - Open End Rod; T - Thin Wall Tube; U - Undisturbed Sample; S - Split Spoon Sample

Well Diagram: Riser Pipe; Screen; Filter Sand; Cuttings; Grout; Concrete; Bentonite Seal

Summary: Overburden (ft) 44.0; Rock Cored (ft) --; Samples 14S, 1U

Boring No. HA10-9

Field Tests: Dilatancy: R - Rapid S - Slow N - None; Plasticity: N - Nonplastic L - Low M - Medium H - High; Toughness: L - Low M - Medium H - High; Dry Strength: N - None L - Low M - Medium H - High V - Very High

*Note: Maximum particle size is determined by direct observation within the limitations of sampler size.

Note: Soil identification based on visual-manual methods of the USCS as practiced by Haley & Aldrich, Inc.

TEST BORING REPORT

HALEY & ALDRICH

Project	Portland International Marine Terminal Improvements, Portland, Maine
Client	HNTB Corporation
Contractor	Maine Test Borings

Boring No.	HA10-8
File No.	37272-000
Sheet No.	1 of 1
Start	18 November 2010
Finish	18 November 2010
Driller	R. Leonard
H&A Rep.	M. Foley
Elevation	10.5 (approx.)
Datum	NGVD 29
Location	See Plan

	Casing	Sampler	Barrel	Drilling Equipment and Procedures
Type	SSA	S	-	Rig Make & Model: Mobile Drill B53
Inside Diameter (in.)	-	1.375	-	Bit Type: Roller Bit; Drill Mud: None
Hammer Weight (lb)	-	140	-	Casing: SSA to 8.5'
Hammer Fall (in.)	-	30	-	Hoist/Hammer: Winch / Safety Hammer; PID Make & Model: N/A

Depth (ft)	Sampler Blows per 6 in.	Sample No. & Rec. (in.)	Sample Depth (ft)	Stratum Change Elev/Depth (ft)	USCS Symbol	VISUAL-MANUAL IDENTIFICATION AND DESCRIPTION (Density/consistency, color, GROUP NAME, max. particle size*, structure, odor, moisture, optional descriptions; GEOLOGIC INTERPRETATION)	Gravel % Coarse	Gravel % Fine	Sand % Coarse	Sand % Medium	Sand % Fine	Sand % Fines	Field Test Distancy	Field Test Toughness	Field Test Plasticity	Field Test Strength
0				10.3 / 0.2		-BITUMINOUS CONCRETE-										
	9 11 11 19	S1 21	0.5 2.5	9.5 / 1.0	SW	Medium dense, brown, well graded SAND with gravel (SW), mps 0.75 in., no odor, moist	25	15	15	45						
					SP	-BASE/SUBBASE-	20	10	10	60						
	13 15 13 9	S2 15	2.5 4.5	8.0 / 2.5	SW	Medium dense, brown to black, poorly graded SAND with gravel (SP), mps 0.4 in., no odor, moist, contains coal, brick fragments and glass shards; Medium dense, brown, well graded SAND with gravel (SW), mps 1.0 in., no odor, moist, trace brick fragments and ash	15	20	15	50						
	5 23 17 15	S3 21	4.5 6.5		SW	Dense, brown, well graded SAND with silt and gravel (SW); mps 1.5 in., no odor, moist, some ash layers	20	15	15	40	10					
	20 15 12 9	S4 12	6.5 8.5		SW	Medium dense, brown, well graded SAND with gravel (SW), mps 0.75 in., no odor, moist -FILL-	30	15	10	45						
	4 2 2 3	S5 4	8.5 10.5		SW	Loose, brown, well graded SAND with gravel (SW), mps 1.0 in., no odor, moist to wet, gravel in tip of sampler, split spoon tip is wet	20	15	15	50						
				0.0 / 10.5		Bottom of Exploration 10.5 ft										

Water Level Data

Date	Time	Elapsed Time (hr.)	Depth (ft) to: Bottom of Casing	Bottom of Hole	Water

Sample ID: O - Open End Rod; T - Thin Wall Tube; U - Undisturbed Sample; S - Split Spoon Sample

Well Diagram: Riser Pipe; Screen; Filter Sand; Cuttings; Grout; Concrete; Bentonite Seal

Summary: Overburden (ft) 10.5; Rock Cored (ft) --; Samples 5S

Boring No. HA10-8

Field Tests: Dilatancy: R - Rapid S - Slow N - None; Plasticity: N - Nonplastic L - Low M - Medium H - High; Toughness: L - Low M - Medium H - High; Dry Strength: N - None L - Low M - Medium H - High V - Very High

*Note: Maximum particle size is determined by direct observation within the limitations of sampler size.

Note: Soil identification based on visual-manual methods of the USCS as practiced by Haley & Aldrich, Inc.

TEST BORING REPORT

HALEY & ALDRICH

Boring No.	HA10-5
File No.	37272-000
Sheet No.	2 of 2

Depth (ft)	Sampler Blows per 6 in.	Sample No. & Rec. (in.)	Sample Depth (ft)	Stratum Change Elev/Depth (ft)	USCS Symbol	VISUAL-MANUAL IDENTIFICATION AND DESCRIPTION (Density/consistency, color, GROUP NAME, max. particle size*, structure, odor, moisture, optional descriptions; GEOLOGIC INTERPRETATION)	Gravel % Coarse	Gravel % Fine	Sand % Coarse	Sand % Medium	Sand % Fine	Sand % Fines	Field Test Distancy	Field Test Toughness	Field Test Plasticity	Field Test Strength
20	WOH 3					organics, some seams of medium to coarse sand -HARBOR BOTTOM DEPOSIT-										
25	12 11 12 14	S10 24	24.0 26.0	-12.5 / 24.0	SC	Medium dense, light brown, clayey SAND (SC), mps 4.0 mm, slight organic odor, wet, contains red-brown to dark brown layers of iron staining -MARINE DEPOSIT- (Sand)			5	60	35					
				-14.5 / 26.0		Bottom of Exploration 26.0 ft										

NOTE: Soil identification based on visual-manual methods of the USCS as practiced by Haley & Aldrich, Inc.

Boring No. HA10-5

TEST BORING REPORT

HALEY & ALDRICH

Project	Portland International Marine Terminal Improvements, Portland, Maine
Client	HNTB Corporation
Contractor	Maine Test Borings

Boring No.	HA10-7
File No.	37272-000
Sheet No.	1 of 1
Start	18 November 2010
Finish	18 November 2010
Driller	R. Leonard
H&A Rep.	M. Foley
Elevation	10.5 (approx.)
Datum	NGVD 29
Location	See Plan

	Casing	Sampler	Barrel	Drilling Equipment and Procedures
Type	SSA	S	-	Rig Make & Model: Mobile Drill B53
Inside Diameter (in.)	-	1.375	-	Bit Type: Roller Bit
Hammer Weight (lb)	-	140	-	Casing: SSA to 8.5'
Hammer Fall (in.)	-	30	-	Hoist/Hammer: Winch / Safety Hammer; PID Make & Model: N/A

Depth (ft)	Sampler Blows per 6 in.	Sample No. & Rec. (in.)	Sample Depth (ft)	Stratum Change Elev/Depth (ft)	USCS Symbol	VISUAL-MANUAL IDENTIFICATION AND DESCRIPTION (Density/consistency, color, GROUP NAME, max. particle size*, structure, odor, moisture, optional descriptions; GEOLOGIC INTERPRETATION)	Gravel % Coarse	Gravel % Fine	Sand % Coarse	Sand % Medium	Sand % Fine	Sand % Fines	Field Test Distancy	Field Test Toughness	Field Test Plasticity	Field Test Strength
0				10.1 / 0.4		-BITUMINOUS CONCRETE-										
	17 20 17 13	S1 16	0.5 2.5	9.5 / 1.0	SW	Dense, brown, well graded SAND with gravel (SW), mps 1.5 in., no odor, dry	25	15	15	45						
					SW	-BASE/SUBBASE-										
	11 12 9 3	S2 16	2.5 4.5		SP	Dense, black, well graded SAND with gravel (SW), mps 0.5 in., no odor, moist, contains coal and ash; Medium dense, dark brown, poorly graded SAND with silt and gravel (SP), mps 0.2 in., no odor, moist, contains ash and trace bricks	15	5	10	60	10					
	2 2 3 8	S3 17	4.5 6.5		SM	Loose, dark brown, silty SAND with gravel (SM), mps 1.3 in., no odor, wet -FILL-	20	5	10	45	20					
	10 6 7 9	S4 10	6.5 8.5	4.0 / 6.5	OL/OH	Medium stiff, dark brown, ORGANIC SILT (OL/OH), contains abundant brick fragments, mps 1.0 in., no odor, wet				10	90					
	1 1 2 2	S5 24	8.5 10.5	1.6 / 8.9	OL/OH	Very soft, dark brown, ORGANIC SILT (OL/OH), contains abundant brick fragments, mps 1.0 in., no odor, wet				10	90					
					SP	Very loose, brown, poorly graded SAND (SP), mps 4.0 mm, no odor, wet -FILL-		5	20	75						
				0.0 / 10.5		Bottom of Exploration 10.5 ft										

Water Level Data

Date	Time	Elapsed Time (hr.)	Depth (ft) to: Bottom of Casing	Bottom of Hole	Water

Sample ID: O - Open End Rod; T - Thin Wall Tube; U - Undisturbed Sample; S - Split Spoon Sample

Well Diagram: Riser Pipe; Screen; Filter Sand; Cuttings; Grout; Concrete; Bentonite Seal

Summary: Overburden (ft) 10.5; Rock Cored (ft) --; Samples 5S

Boring No. HA10-7

Field Tests: Dilatancy: R - Rapid S - Slow N - None; Plasticity: N - Nonplastic L - Low M - Medium H - High; Toughness: L - Low M - Medium H - High; Dry Strength: N - None L - Low M - Medium H - High V - Very High

*Note: Maximum particle size is determined by direct observation within the limitations of sampler size.

Note: Soil identification based on visual-manual methods of the USCS as practiced by Haley & Aldrich, Inc.

TEST BORING REPORT

HALEY & ALDRICH

Boring No.	HA10-9
File No.	37272-000
Sheet No.	2 of 2

Depth (ft)	Sampler Blows per 6 in.	Sample No. & Rec. (in.)	Sample Depth (ft)	Stratum Change Elev/Depth (ft)	USCS Symbol	VISUAL-MANUAL IDENTIFICATION AND DESCRIPTION (Density/consistency, color, GROUP NAME, max. particle size*, structure, odor, moisture, optional descriptions; GEOLOGIC INTERPRETATION)	Gravel % Coarse	Gravel % Fine	Sand % Coarse	Sand % Medium	Sand % Fine	Sand % Fines	Field Test Distancy	Field Test Toughness	Field Test Plasticity	Field Test Strength
20	1 2					-HARBOR BOTTOM DEPOSIT-										
25	2 1 1 2	S11 9	24.0 26.0	-15.5 / 27.0	ML	Soft, gray, sandy SILT with organics (ML), mps 0.42 mm, contains shell fragments, mps 0.075 mm, organic odor, wet				35	65					
30	WOH WOH WOH 2	S12 24	29.0 31.0		CL	Very soft, gray, lean CLAY (CL), mps 0.075 mm, no odor, wet, black streaks of organics -MARINE DEPOSIT- (Clay)				100						
						Note: Attempted vane shear test at 33.0 ft, vane would not advance due to probable sand seam.										
35		U1 16	35.0 37.0			U1 (35.0-37.0 ft)										
40	1 2 2 6	S13 24	39.5 41.5	-28.0 / 39.5	CL	Note: Attempted vane shear test at 39.5 ft, unable to advance through soils. Soft, gray, lean CLAY with sand (CL), mps 0.42 mm, no odor, wet, frequent gray, fine sand seams. Brown, fine sand seam in bottom 2 in. of spoon. -MARINE DEPOSIT- (Clay)				25	75					
	3 10 16 18	S14 20	42.0 44.0	-29.5 / 41.0	SC	Medium dense, brown, clayey SAND (SC), mps 0.42 mm, thin (0.1 in.) horizontal layers of iron staining in the sand -MARINE DEPOSIT- (Sand)				65	35					
				-32.5 / 44.0		Bottom of Exploration 44.0 ft										

NOTE: Soil identification based on visual-manual methods of the USCS as practiced by Haley & Aldrich, Inc.

Boring No. HA10-9

BORING NO.	STATION	OFFSET (RT)
HA10-5	5+11.1	231.2'
HA10-6	3+71.2	258.8'
HA10-7	5+76.8	322.2'
HA10-8	3+15.6	358.4'
HA10-9	4+34.7	419.2'

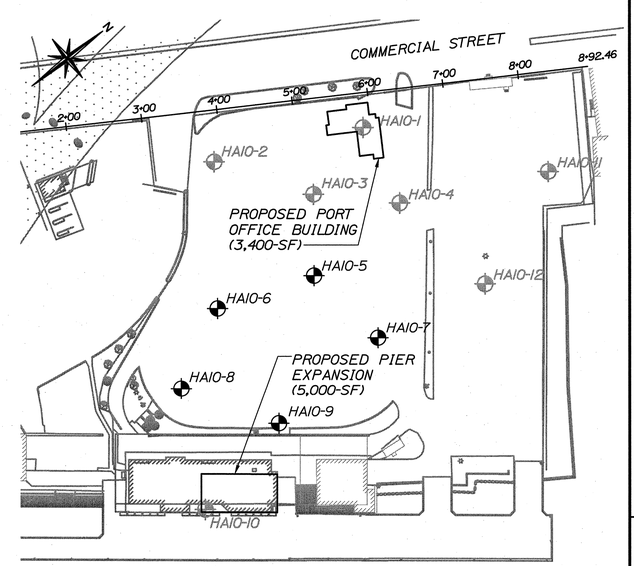

BORING PLAN

SCALE: 1"=100'-0"

HALEY & ALDRICH

STATE OF MAINE
DEPARTMENT OF TRANSPORTATION

PROJECT NUMBER 017820.00

PIN 17820.00

WAYNE A. GHADBOURNE No. 10020 LICENSED PROFESSIONAL ENGINEER STATE OF MAINE

	BY	DATE
PROJ. MANAGER CRAIG R. MORIN		
DESIGN-DETAILED	HME	3/25/11
CHECKED-REVIEWED	EFW	3/25/11
DESIGN2-DETAILED2	WAC	SIGNATURE
DESIGN3-DETAILED3		10020
REVISIONS 1		P.E. NUMBER
REVISIONS 2		
REVISIONS 3		3/22/2011
REVISIONS 4		DATE
FIELD CHANGES		

PORTLAND INTERNATIONAL MARINE TERMINAL IMPROVEMENTS
PORTLAND CUMBERLAND COUNTY

BORING LOGS II

SHEET NUMBER

C3

HALEY & ALDRICH — TEST BORING REPORT

Boring No. HA10-10

Project	Portland International Marine Terminal Improvements, Portland, Maine
Client	HNTB Corporation
Contractor	Maine Test Borings
File No.	37272-000
Sheet No.	1 of 4
Start	16 November 2010
Finish	18 November 2010
Driller	R. Leonard
H&A Rep.	M. Foley
Elevation	-3.5 (approx.)
Datum	NGVD 29
Location	See Plan

	Casing	Sampler	Barrel
Type	HW/NW	S	-
Inside Diameter (in.)	4.0/3.0	1.375	-
Hammer Weight (lb)	300	140	-
Hammer Fall (in.)	16	30	-

Drilling Equipment and Procedures: Rig Make & Model: Mobile Drill B53; Bit Type: Roller Bit; Drill Mud: None; Casing: HW 4" to 20', NW 3" to 70'; Hoist/Hammer: Winch / Safety Hammer; PID Make & Model: N/A

Depth (ft)	Sampler Blows per 6 in.	Sample No. & Rec. (in.)	Sample Depth (ft)	Stratum Change Elev/Depth (ft)	USCS Symbol	Visual-Manual Identification and Description (Density/consistency, color, GROUP NAME, max. particle size*, structure, odor, moisture, optional descriptions GEOLOGIC INTERPRETATION)	Gravel % Coarse	Gravel % Fine	Sand % Coarse	Sand % Medium	Sand % Fine	% Fines	Dilatancy	Toughness	Plasticity	Strength
0						Note: Test boring drilled from deck level (approx. El. 15.5). Depth from deck level to mudline approx. 19 ft. Note: Advance casing through rip rap/mud to 3.5 ft. -RIP RAP- -FILL-										
	WOH WOH WOH WOH	S1 10	3.5 5.5	-7.0 3.5	OL/OH	Very soft, dark gray to black, sandy ORGANIC SILT with sand (OL/OH), mps 0.3 in., strong organic odor, wet, contains brick fragments, contains wood and shell fragments					20	80				
5	WOR WOR WOR WOH	S2 0	5.5 7.5			No Recovery										
10	WOR 1 1 WOH	S3 24	10.0 12.0		OL/OH	Very soft, gray, sandy ORGANIC SILT (OL/OH), 0.42 in., strong organic odor, wet -HARBOR BOTTOM DEPOSIT-					30	70				
15	5 10 13 16	S4 14	15.0 17.0	-18.5 15.0	SP	Medium dense, gray, poorly graded SAND (SP), mps 4.0 mm, no odor, wet -MARINE DEPOSIT- (Sand)				20	80					
20																

Water Level Data: Date | Time | Elapsed Time (hr.) | Depth (ft) to: Bottom of Casing | Bottom of Hole | Water

Sample ID: O - Open End Rod; T - Thin Wall Tube; U - Undisturbed Sample; S - Split Spoon Sample

Well Diagram: Riser Pipe; Screen; Filter Sand; Cuttings; Grout; Concrete; Bentonite Seal

Summary: Overburden (ft) 85.3; Rock Cored (ft) --; Samples 16S

Boring No. HA10-10

Field Tests: Dilatancy: R - Rapid S - Slow N - None; Toughness: L - Low M - Medium H - High; Plasticity: N - Nonplastic L - Low M - Medium H - High; Dry Strength: N - None L - Low M - Medium H - High V - Very High

*Note: Maximum particle size is determined by direct observation within the limitations of sampler size.

Note: Soil identification based on visual-manual methods of the USCS as practiced by Haley & Aldrich, Inc.

HALEY & ALDRICH — TEST BORING REPORT

Boring No. HA10-10 — File No. 37272-000 — Sheet No. 2 of 4

Depth (ft)	Sampler Blows per 6 in.	Sample No. & Rec. (in.)	Sample Depth (ft)	Stratum Change Elev/Depth (ft)	USCS Symbol	Visual-Manual Identification and Description	Gravel % Coarse	Gravel % Fine	Sand % Coarse	Sand % Medium	Sand % Fine	% Fines	Dilatancy	Toughness	Plasticity	Strength
20	10 9 6 4	S5 14	20.0 22.0		SP	Medium dense, gray, poorly graded SAND with silt (SP), mps 4.0 mm, no odor, wet			5	15	70	10				
				-24.5 21.0	ML	Stiff, gray, sandy SILT (ML), mps 0.42 mm, organic odor -MARINE DEPOSIT- (Sand)					35	65				
25	2 WOH WOH 1	S6 24	25.0 27.0		ML	Very soft, gray, sandy SILT (ML), mps 2.0 mm, organic odor, wet, contains shell fragments				5	35	60				
				-29.0 25.5	CL	Very soft, gray, lean CLAY (CL), with frequent seams of very fine sand -MARINE DEPOSIT- (Clay)					25	75				
				-32.5 29.0												
30	8 7 12 17	S7 14	30.0 32.0		SM	Medium dense, gray, silty SAND (SM), mps 0.42 mm, organic odor, wet, black organic staining					85	15				
				-34.0 30.5	SC	Medium dense, olive-brown, clayey SAND (SC), mps 2.0 mm, no odor, wet -MARINE DEPOSIT- (Sand)				5	65	30				
35	10 14 8 19	S8 13	35.0 37.0		SP	Medium dense, light brown grading to rusty-brown, poorly graded SAND (SP), mps 2.0 mm, no odor, wet				25	75					
40	7 11 14 12	S9 21	40.0 42.0		SM	Medium dense, brown, silty SAND (SM), mps 2.0 mm, no odor, wet, occasional clayey sand layers, occasional iron staining Note: Drill action indicates gravel in sand at 42.0 ft.				5	65	30				
				-47.5 44.0		Note: Drill action indicates cobbles at 44.0 ft.										
45	40 25 24 19	S10 10	45.0 47.0		SW	Dense, brown grading to gray at 46 ft, well graded SAND with gravel (SW), mps 1.3 in., no odor, wet -MARINE DEPOSIT- (Sand)		25	15	20	45					

NOTE: Soil identification based on visual-manual methods of the USCS as practiced by Haley & Aldrich, Inc. **Boring No. HA10-10**

HALEY & ALDRICH — TEST BORING REPORT

Boring No. HA10-10 — File No. 37272-000 — Sheet No. 3 of 4

Depth (ft)	Sampler Blows per 6 in.	Sample No. & Rec. (in.)	Sample Depth (ft)	Stratum Change Elev/Depth (ft)	USCS Symbol	Visual-Manual Identification and Description	Gravel % Coarse	Gravel % Fine	Sand % Coarse	Sand % Medium	Sand % Fine	% Fines	Dilatancy	Toughness	Plasticity	Strength
50	13 11 11 20	S11 10	50.0 52.0		SP	Medium dense, gray, poorly graded SAND (SP), mps 1.0 in., no odor, wet -MARINE DEPOSIT- (Sand)		5	10	25	55	5				
55	40 11 6 5	S12 8	55.0 57.0	-58.5 55.0	SW	Medium dense, gray, well graded SAND with gravel (SW), mps 1.3 in., no odor, wet Note: Casing pushed on cobble at 55.5 ft. -ICE CONTACT DEPOSIT-		35	20	20	20	5				
60	5 5 5 6	NR 0	60.0 62.0			Note: No recovery. Sand and gravel in casing.										
65	11 11 13 17	S13 8	65.0 67.0		SW	Medium dense, gray, well graded SAND with gravel (SW), mps 0.75 in., no odor, wet		15	35	30	20					
				-72.5 69.0												
70	67 100/4"	S14 8	70.0 70.8		SP	Very dense, gray, poorly graded SAND with gravel (SP), mps 0.75 in., well bonded, no odor, wet -GLACIAL TILL-		20	10	10	55	5				
75	106/2"	S15 2	75.0 75.2		SP	Very dense, gray, poorly graded SAND with gravel (SP), mps 0.75 in., no odor, wet Note: 0.5 ft of sand in casing at 75.0 ft.		20	5	10	65					

NOTE: Soil identification based on visual-manual methods of the USCS as practiced by Haley & Aldrich, Inc. **Boring No. HA10-10**

HALEY & ALDRICH — TEST BORING REPORT

Boring No. HA10-10 — File No. 37272-000 — Sheet No. 4 of 4

Depth (ft)	Sampler Blows per 6 in.	Sample No. & Rec. (in.)	Sample Depth (ft)	Stratum Change Elev/Depth (ft)	USCS Symbol	Visual-Manual Identification and Description	Gravel % Coarse	Gravel % Fine	Sand % Coarse	Sand % Medium	Sand % Fine	% Fines	Dilatancy	Toughness	Plasticity	Strength
80	100/3"	S16 3	80.0 80.2		SP	Very dense, blue-gray to gray, poorly graded SAND with silt and gravel (SP), mps 1.0 in., well bonded, no odor, wet -GLACIAL TILL-		20	5	10	55	10				
85	120/4"	S17 2	85.0 85.3	-88.8 85.3	SP	Very dense, brown, poorly graded SAND with gravel (SP), mps 0.3 in., poorly bonded, no odor, wet Note: 4.5 in. sand in casing at 85.0 ft. Bottom of Exploration 85.3 ft		25	5	10	60					

NOTE: Soil identification based on visual-manual methods of the USCS as practiced by Haley & Aldrich, Inc. **Boring No. HA10-10**

HALEY & ALDRICH — TEST BORING REPORT

Boring No. HA10-11

Project	Portland International Marine Terminal Improvements, Portland, Maine
Client	HNTB Corporation
Contractor	Maine Test Borings
File No.	37272-000
Sheet No.	1 of 1
Start	18 November 2010
Finish	18 November 2010
Driller	R. Leonard
H&A Rep.	M. Foley
Elevation	12.5 (approx.)
Datum	NGVD 29
Location	See Plan

	Casing	Sampler	Barrel
Type	SSA	S	-
Inside Diameter (in.)	-	1.375	-
Hammer Weight (lb)	-	140	-
Hammer Fall (in.)	-	30	-

Drilling Equipment and Procedures: Rig Make & Model: Mobile Drill B53; Bit Type: Roller Bit; Drill Mud: None; Casing: SSA to 1.0'; Hoist/Hammer: Winch / Safety Hammer; PID Make & Model: N/A

Depth (ft)	Sampler Blows per 6 in.	Sample No. & Rec. (in.)	Sample Depth (ft)	Stratum Change Elev/Depth (ft)	USCS Symbol	Visual-Manual Identification and Description	Gravel % Coarse	Gravel % Fine	Sand % Coarse	Sand % Medium	Sand % Fine	% Fines	Dilatancy	Toughness	Plasticity	Strength
0				12.3 0.2		-BITUMINOUS CONCRETE-										
					SW	Augered through cobble at 0.5 ft		20	10	15	55					
	11 30 30 15	S1 22	1.0 3.0	11.5 1.0	SW	Dense, brown, well graded SAND with gravel (SW)		10	5	75	10					
				11.0 1.5	SP	Very dense, white, poorly graded SAND (SP) -BASE/SUBBASE-		20	10	15	50	5				
				9.5 3.0		Very dense, dark brown, well graded SAND with gravel (SW), contains brick fragments, ash, mps 2.0 in., no odor, dry -FILL- Bottom of Exploration 3.0 ft										

Summary: Overburden (ft) 3.0; Rock Cored (ft) --; Samples 1S

Boring No. HA10-11

Field Tests: Dilatancy: R - Rapid S - Slow N - None; Toughness: L - Low M - Medium H - High; Plasticity: N - Nonplastic L - Low M - Medium H - High; Dry Strength: N - None L - Low M - Medium H - High V - Very High

*Note: Maximum particle size is determined by direct observation within the limitations of sampler size.

Note: Soil identification based on visual-manual methods of the USCS as practiced by Haley & Aldrich, Inc.

HALEY & ALDRICH — TEST BORING REPORT

Boring No. HA10-12

Project	Portland International Marine Terminal Improvements, Portland, Maine
Client	HNTB Corporation
Contractor	Maine Test Borings
File No.	37272-000
Sheet No.	1 of 1
Start	18 November 2010
Finish	18 November 2010
Driller	R. Leonard
H&A Rep.	M. Foley
Elevation	13.5 (approx.)
Datum	NGVD 29
Location	See Plan

	Casing	Sampler	Barrel
Type	SSA	S	-
Inside Diameter (in.)	-	1.375	-
Hammer Weight (lb)	-	140	-
Hammer Fall (in.)	-	30	-

Drilling Equipment and Procedures: Rig Make & Model: Mobile Drill B53; Bit Type: Roller Bit; Drill Mud: None; Casing: SSA to 0.5'; Hoist/Hammer: Winch / Safety Hammer; PID Make & Model: N/A

Depth (ft)	Sampler Blows per 6 in.	Sample No. & Rec. (in.)	Sample Depth (ft)	Stratum Change Elev/Depth (ft)	USCS Symbol	Visual-Manual Identification and Description	Gravel % Coarse	Gravel % Fine	Sand % Coarse	Sand % Medium	Sand % Fine	% Fines	Dilatancy	Toughness	Plasticity	Strength
0				13.2 0.3		-BITUMINOUS CONCRETE-										
	13 30 14 18	S1 17	0.5 2.5		SW	Dense, brown, well graded SAND with gravel (SW), mps 1.0 in., no odor, damp		20	15	15	50					
				12.5 1.0	SP	Dense, dark brown to black, poorly graded SAND with gravel (SP), mps 1.5 in., no odor, moist -BASE/SUBBASE-		15	5	10	70					
	17 11 18 12	S2 13	2.5 4.5	11.0 2.5	SM	Medium dense, dark brown, silty SAND with gravel (SM), mps 1.5 in., no odor, moist, contains ash, decomposed wood and brick fragments -FILL-		20	5	10	45	20				
				9.0 4.5		Bottom of Exploration 4.5 ft										

Summary: Overburden (ft) 4.5; Rock Cored (ft) --; Samples 2S

Boring No. HA10-12

Field Tests: Dilatancy: R - Rapid S - Slow N - None; Toughness: L - Low M - Medium H - High; Plasticity: N - Nonplastic L - Low M - Medium H - High; Dry Strength: N - None L - Low M - Medium H - High V - Very High

*Note: Maximum particle size is determined by direct observation within the limitations of sampler size.

Note: Soil identification based on visual-manual methods of the USCS as practiced by Haley & Aldrich, Inc.

H&A-TEST BORING-07-1 HA-LIB07-1R-POR-06-03-08.GLB HA-TB+CORE+WELL-07-1.GDT G:\PROJECTS\37272 - IMT\000\FIELD\37272-000_HA10-1_HA10-12.GPJ 15 Mar 11

BORING NO.	STATION	OFFSET (RT)
HA10-10	3+28.1	520.6'
HA10-11	8+27.7	131.6'
HA10-12	7+27.8	268.1'

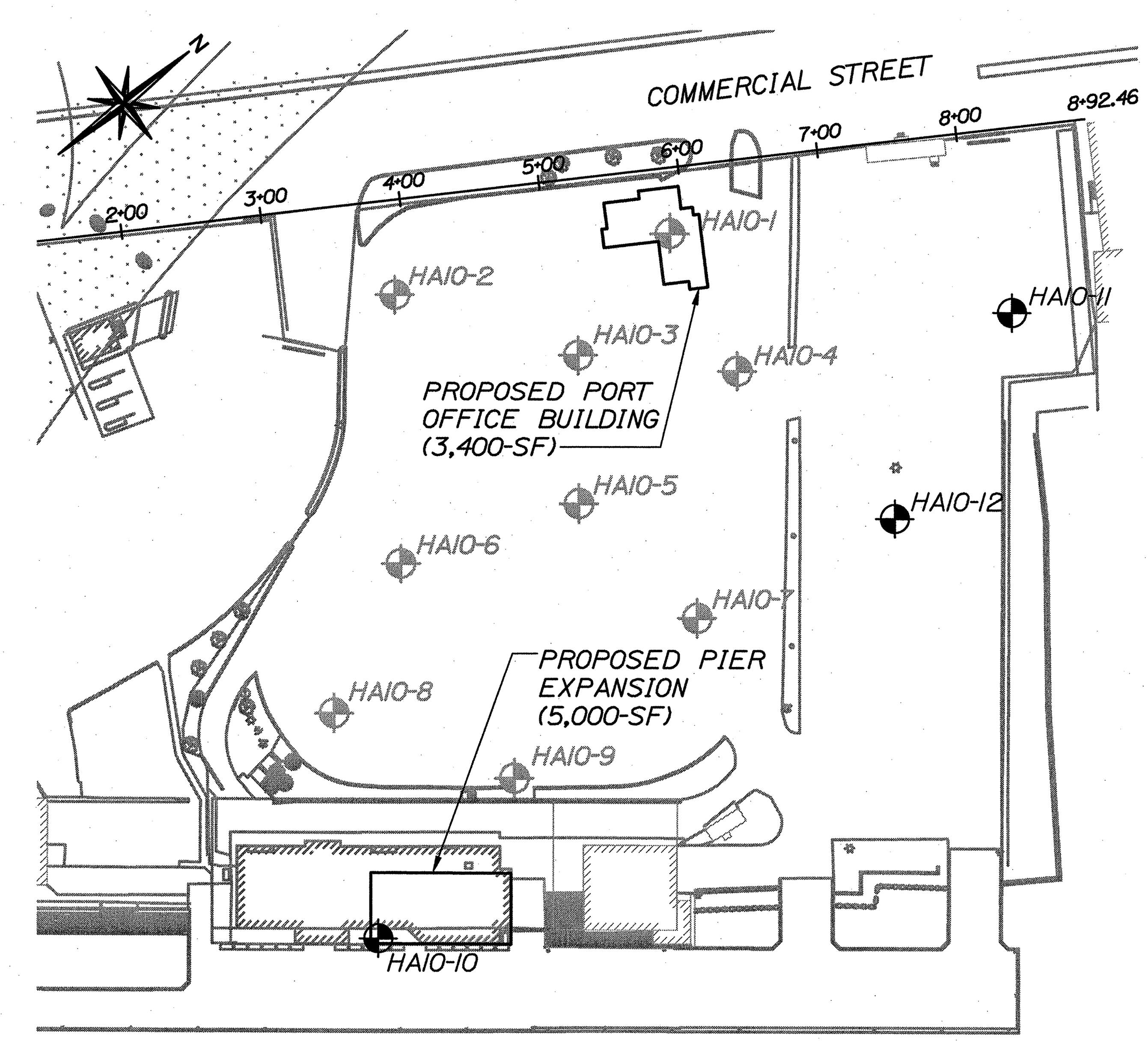

BORING PLAN
SCALE: 1"=100'-0"

HALEY & ALDRICH

STATE OF MAINE
DEPARTMENT OF TRANSPORTATION
PROJECT NUMBER 017820.00
PIN 017820.00

STATE OF MAINE — WAYNE A. CHADBOURNE No. 10620 — LICENSED PROFESSIONAL ENGINEER

SIGNATURE
P.E. NUMBER 10620
DATE 3/22/2011

	BY	DATE
PROJ. MANAGER CRAIG R. MORIN		
DESIGN-DETAILED	HME	3/25/11
CHECKED-REVIEWED	EFW	3/25/11
DESIGN2-DETAILED2	-	-
DESIGN3-DETAILED3	-	-
REVISIONS 1	-	-
REVISIONS 2	-	-
REVISIONS 3	-	-
REVISIONS 4	-	-
FIELD CHANGES	-	-

PORTLAND INTERNATIONAL MARINE TERMINAL IMPROVEMENTS
PORTLAND CUMBERLAND COUNTY

BORING LOGS III

SHEET NUMBER
C4

M:\jobs\50921 - Maine Port Authority\002 - Portland IMT Facility\CAD\PLANS-C-BORING LOGS.dwg, 3/17/2011 12:34:53 PM, mielliott

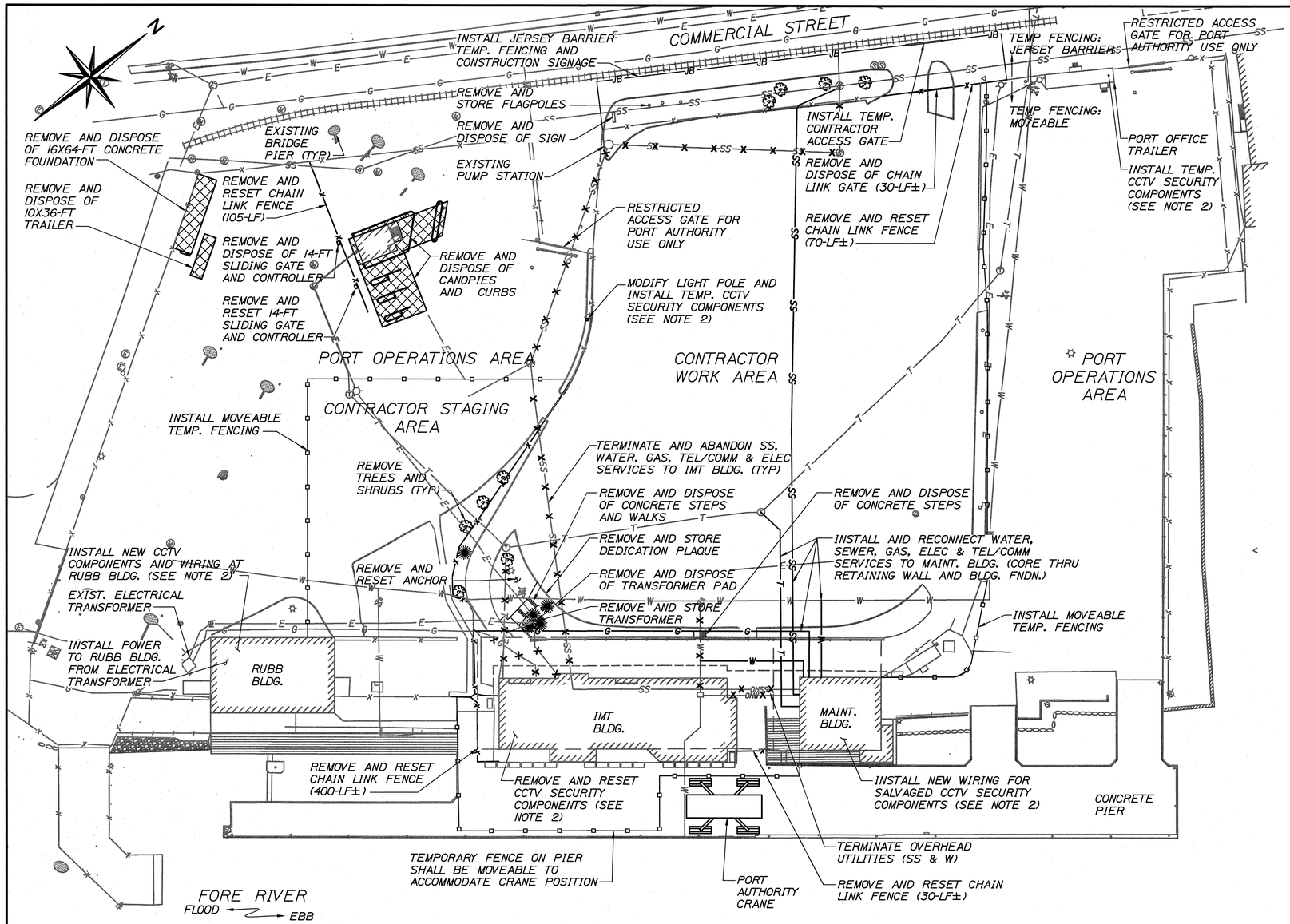

PHASE I: PRE-DEMOLITION ACTIVITIES

SCALE: 1"=50'-0"

25 0 50 100-FT

GENERAL PHASING NOTES:

1. THE PHASING SEQUENCE SHOWN HEREIN ACCOMMODATES FACILITY OPERATIONS, SECURITY AND ANTICIPATED CONSTRUCTION SEQUENCE. THE CONSTRUCTION PHASE NOTES DESCRIBE THE WORK TO BE INCLUDED IN THE DESIGNATED PHASE HOWEVER DO NOT DENOTE THE ORDER IN WHICH THE WORK MUST OCCUR.

2. SCHEDULING OF ALL WORK SHALL BE COORDINATED WITH THE OWNER AND THE RESIDENT. COORDINATION MEETINGS WITH THE OWNER, RESIDENT AND CONTRACTOR WILL IDENTIFY THE LIMITS OF PROPOSED WORK SCHEDULED TO BE COMPLETED AT THE END OF EACH PHASE.

3. UTILITIES REMOVED FROM SERVICE MUST BE RECONNECTED AND OPERATIONAL WITHIN A TIMEFRAME ACCEPTED BY THE OWNER. CCTV AND SECURITY SYSTEMS MUST REMAIN ONLINE AT ALL TIMES.

4. THE CONTRACTOR SHALL CONTACT ALL APPROPRIATE UTILITIES TO ARRANGE FOR TERMINATION AND REMOVAL OF SALVAGEABLE EQUIPMENT AND MATERIALS.

GENERAL PHASING NOTES (CONTINUED):

5. THE PRIMARY CONSTRUCTION ZONE SHALL REMAIN CONFINED BY TEMPORARY FENCING AND SECURED GATES AT ALL TIMES. THE CONTRACTOR ACCESS GATE SHALL REMAIN CLOSED WHEN NOT IN USE AND SHALL BE LOCKED DAILY UPON COMPLETION OF CONSTRUCTION ACTIVITIES. DURING ACTIVITIES THAT RESULT IN GAPS IN SECURITY FENCING, THE CONTRACTOR WILL BE RESPONSIBLE FOR RESTRICTING THE GENERAL PUBLIC ONTO THE CONSTRUCTION SITE.

6. THE PORT AUTHORITY MAY PERMIT THE TEMPORARY USE OF PORTIONS OF THE PORT OPERATIONS AREA TO THE CONTRACTOR FOR SHORT PERIODS OF TIME. REQUESTS MUST BE MADE IN WRITING TO THE AUTHORITY AND MUST DESCRIBE THE SIZE OF THE AREA NEEDED, FUNCTION, AND DURATION. THE AUTHORITY WILL CONSIDER WRITTEN REQUESTS ONLY.

7. THE CONTRACTOR SHALL BE LIMITED TO THE CONTRACTOR WORK AREA AND CONTRACTOR STAGING AREA EXCEPT DURING SCHEDULED CONSTRUCTION ACTIVITIES WHICH OCCUR IN THE PORT OPERATIONS AREAS. CONTRACTOR PERSONNEL SHALL HAVE THE PROPER SECURITY CLEARANCE PRIOR TO ENTERING THESE AREAS.

PHASE I NOTES:

1. INSTALL TEMPORARY FENCING AND ACCESS GATES AROUND PERIMETER OF CONTRACTOR WORK AREA AND STAGING AREA. INSTALL TEMPORARY FENCING AND SIGNAGE ALONG COMMERCIAL STREET.

2. INSTALL CCTV SECURITY COMPONENTS AT RUBB BUILDING, MAINTENANCE BUILDING, AND PORT OFFICE TRAILER AND PUT INTO SERVICE. COORDINATE CCTV SECURITY WORK WITH OWNER'S SECURITY SYSTEM SUPPLIER/INSTALLER; GALAXY INTEGRATED TECHNOLOGIES. ALL CCTV SECURITY WORK MUST BE COMPLETE AND OPERATIONAL PRIOR TO DEMOLITION OF IMT BUILDING.

3. INSTALL NEW UNDERGROUND ELECTRICAL SERVICE TO MAINTENANCE BUILDING. INSTALL ELECTRICAL PANEL AT MAINTENANCE BUILDING AND PUT IN SERVICE. INSTALL ELECTRICAL SERVICE TO RUBB BUILDING. TERMINATE POWER TO IMT BUILDING. REMOVE TRANSFORMER AND DEMOLISH CONCRETE PAD.

4. INSTALL NEW UNDERGROUND GAS SERVICE TO MAINTENANCE BUILDING. INSTALL NEW GAS METERS AT MAINTENANCE BUILDING. PUT IN SERVICE. TERMINATE GAS SERVICE TO IMT BUILDING AND PROPERLY DRAIN AND ABANDON PIPES.

5. INSTALL NEW UNDERGROUND WATER SERVICES TO MAINTENANCE BUILDING. PUT IN SERVICE. TERMINATE WATER SERVICE TO IMT BUILDING AND CUSTOMS BUILDING AND PROPERLY DRAIN PIPES. CAP ABANDONED PIPING AT IMT BUILDING METER PIT AND MAKE MODIFICATIONS TO ALLOW FOR CONTINUATION OF SERVICE TO PIER. EXISTING WATER LINE MAY BE ABANDONED IN PLACE. REMOVE ABANDONED METERS, VALVES AND OTHER ABANDONED EQUIPMENT.

6. INSTALL NEW UNDERGROUND SANITARY SERVICE TO MAINTENANCE BUILDING. PUT IN SERVICE. TERMINATE SANITARY SEWER SERVICE FROM IMT BUILDING AND CUSTOMS BUILDING AND PROPERLY DRAIN, PLUG AND ABANDON PIPING IN PLACE.

7. REMOVE TREES AND SHRUBS.

8. REMOVE CHAIN LINK FENCING, GATES, AND CONTROLLERS AT IMT BUILDING, US CUSTOMS BUILDING, AND CONTRACTOR'S ENTRANCE.

9. SALVAGE ANCHOR AND FLAGPOLES FOR LATER PLACEMENT IN FRONT OF OFFICE BUILDING. SALVAGE PLAQUE AND RETURN TO THE CITY OF PORTLAND.

10. REMOVE AND DISPOSE OF TRAILER (10X36-FT).

11. DEMOLISH CONCRETE STEPS AT RETAINING WALL.

12. DEMOLISH CONCRETE STEPS AND CONCRETE WALKWAYS AT ELECTRICAL TRANSFORMER.

13. DEMOLISH CONCRETE FOUNDATION (16X64-FT).

14. DEMOLISH U.S. CUSTOMS BUILDING CANOPIES AND CURBING.

NOTE:
DEMOLITION MATERIALS SUITABLE FOR REUSE AS FILL MAY BE TEMPORARILY STOCKPILED ON SITE PROVIDED THAT PROPER EROSION CONTROL MEASURES ARE INSTALLED AT PERIMETER OF STOCKPILE. REFER TO SECTION 31 20 00 - EARTHWORK FOR ADDITIONAL DETAILS REGARDING DEMOLITION MATERIAL REUSE.

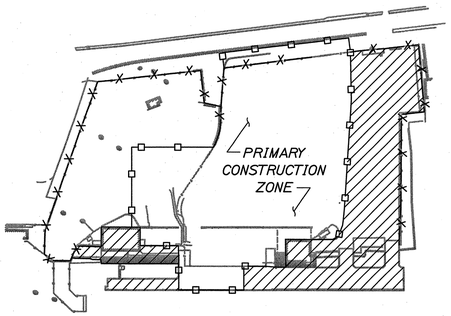

FACILITY SECURITY DIAGRAM DURING CONSTRUCTION PHASE I

NTS

LEGEND

- CONTRACTOR WORK/STAGING AREA
- RESTRICTED AREA (NO ACCESS)
- EXISTING FACILITY SECURITY FENCING
- TEMPORARY FENCING

HNTB

STATE OF MAINE
DEPARTMENT OF TRANSPORTATION

PROJECT NUMBER 017820.00

PIN 017820.00

STATE OF MAINE ROLAND A. LAVALLEE No. 6452 LICENSED PROFESSIONAL ENGINEER

		P.E. NUMBER	
		SIGNATURE	
		DATE	

PROJ. MANAGER	CRAIG R. MORIN		
DESIGN-DETAILED	CRM	HME	3/25/11
CHECKED-REVIEWED	CAH	RAL	3/25/11
DESIGN-DETAILED2	-	-	-
DESIGN-DETAILED3	-	-	-
REVISIONS 1	-	-	-
REVISIONS 2	-	-	-
REVISIONS 3	-	-	-
REVISIONS 4	-	-	-
FIELD CHANGES	-	-	-

PORTLAND INTERNATIONAL MARINE TERMINAL IMPROVEMENTS
PORTLAND CUMBERLAND COUNTY

CONSTRUCTION PHASING PLAN I

SHEET NUMBER

C5

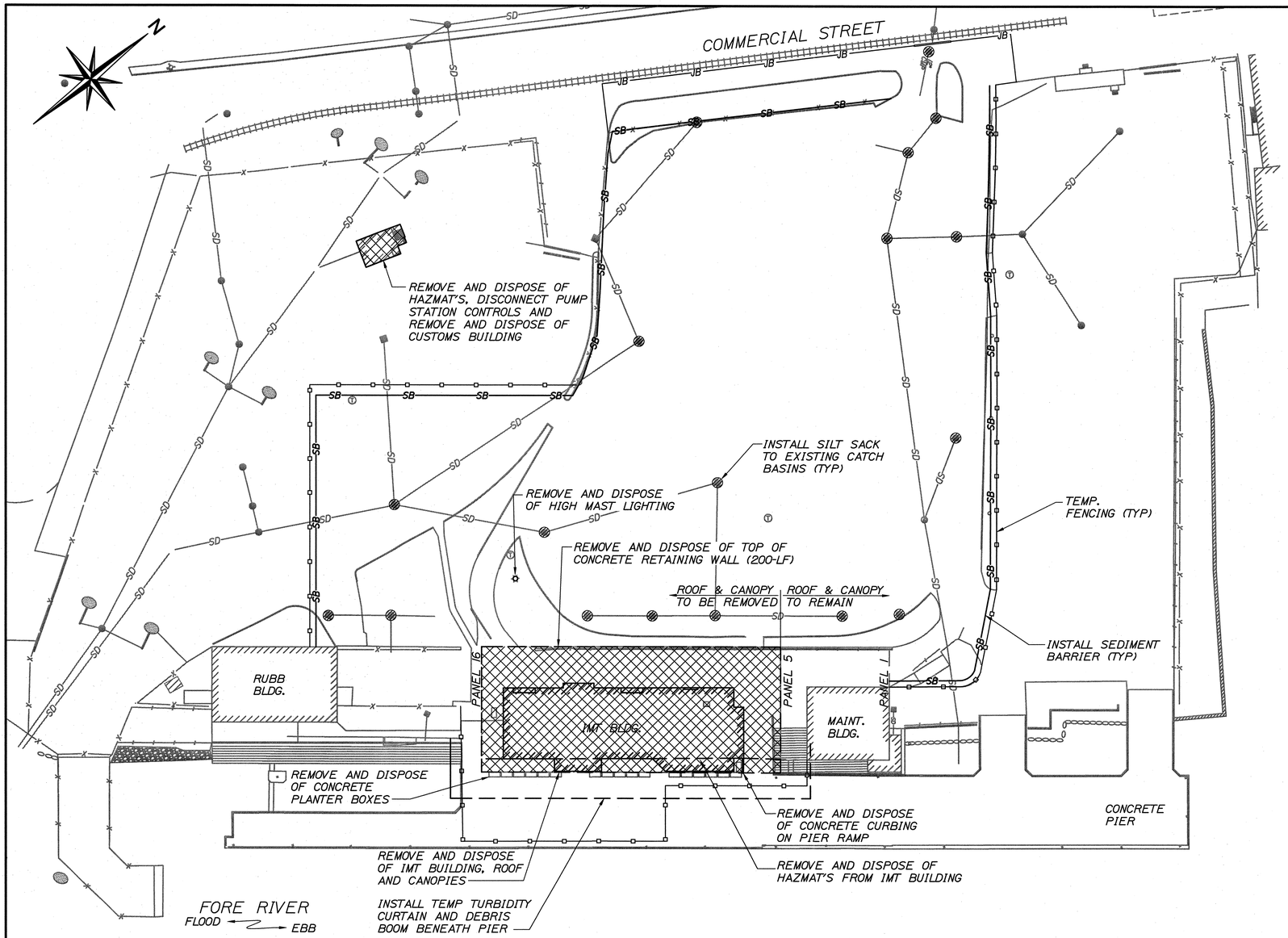

PHASE 2: DEMOLITION ACTIVITIES

SCALE: 1"=50'-0"

25 0 50 100–FT

PHASE 2 NOTES:

1. INSTALL EROSION CONTROL MEASURES AT STORMWATER INLET STRUCTURES. INSTALL SEDIMENT BARRIER AT LIMITS OF PAVEMENT RECONSTRUCTION. INSTALL TURBIDITY CURTAIN AND DEBRIS BOOM BENEATH THE CONCRETE PIER. SUBMIT EROSION CONTROL PLAN TO RESIDENT FOR APPROVAL.

2. REMOVE AND DISPOSE OF ALL HAZARDOUS MATERIALS AT IMT BUILDING AND CUSTOMS BUILDING. DISCONNECT PUMP STATION CONTROLS AND DEMOLISH CUSTOMS BUILDING.

3. SELECTIVE DEMOLITION OF IMT BUILDING:
   A. INSTALL CROSS BRACING AT MAINTENANCE BUILDING PANEL 5;
   B. SELECTIVELY REMOVE IMT BUILDING BETWEEN PANELS 5 AND 6;

4. COMPLETE DEMOLITION OF IMT BUILDING:
   A. REMOVE WEST END METAL WALL SIDING AND STRUCTURAL STEEL ITEMS AT PANEL 16 FOR FUTURE REINSTALLATION AT PANEL 5.
   B. DEMOLISH IMT BUILDING BETWEEN PANELS 5 AND 16;
   C. DEMOLISH CONCRETE SLAB;
   D. REMOVE ALL FOUNDATIONS TO DEPTH OF 3' MINIMUM BELOW FINISH GRADE;
   E. REMOVE PILES;

5. INSTALL SALVAGED STRUCTURAL STEEL, METAL WALL SIDING, AND TIE RODS AT PANEL 5.

6. SELECTIVELY REMOVE CONCRETE CURB ON PIER RAMP.

7. REMOVE TOP OF CONCRETE RETAINING WALL TO A HEIGHT OF 3' BELOW FINISH GRADE.

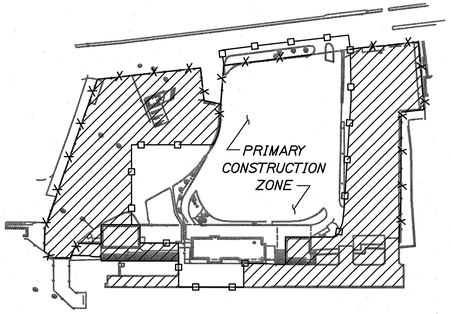

FACILITY SECURITY DIAGRAM DURING CONSTRUCTION PHASE 2

NTS

LEGEND

- CONTRACTOR WORK/STAGING AREA
- RESTRICTED AREA (NO ACCESS)
- EXISTING FACILITY SECURITY FENCING
- TEMPORARY FENCING

HNTB

STATE OF MAINE
DEPARTMENT OF TRANSPORTATION

PROJECT NUMBER 017820.00

PIN 017820.00

STATE OF MAINE ROLAND A. LAVALLEE No. 6452 LICENSED PROFESSIONAL ENGINEER

SIGNATURE		
P.E. NUMBER		
DATE		

PROJ. MANAGER	CRAIG R. MORIN	
DESIGN-DETAILED	CRM	HME
CHECKED-REVIEWED	CAH	RAL
DESIGN2-DETAILED2	-	-
DESIGN3-DETAILED3	-	-
REVISIONS 1	-	-
REVISIONS 2	-	-
REVISIONS 3	-	-
REVISIONS 4	-	-
FIELD CHANGES	-	-
DATE	3/25/11	3/25/11

PORTLAND INTERNATIONAL MARINE TERMINAL IMPROVEMENTS
PORTLAND CUMBERLAND COUNTY

CONSTRUCTION PHASING PLAN II

SHEET NUMBER

C6

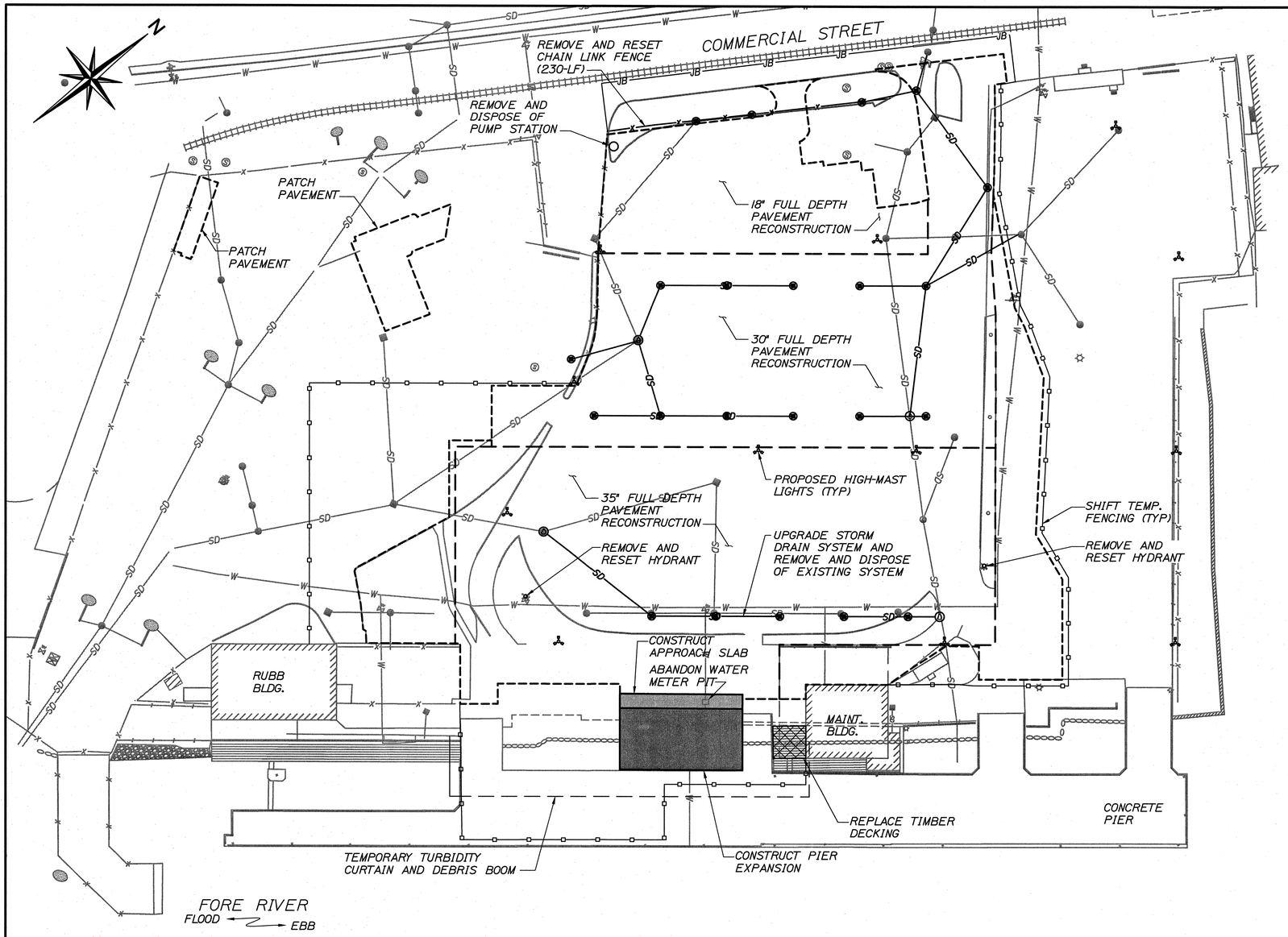

PHASE 3: PAVEMENT RECONSTRUCTION AND PIER CONSTRUCTION

SCALE: 1"=50'-0"

25 0 50 100-FT

PHASE 3 NOTES:

1. SHIFT TEMPORARY FENCING TO LIMITS OF PAVEMENT RECONSTRUCTION.
2. REMOVE EXISTING BITUMINOUS PAVEMENT IN AREAS OF PAVEMENT RECONSTRUCTION.
3. UPGRADE STORM DRAINAGE SYSTEM AND REMOVE EXISTING STORM DRAINAGE AND SANITARY SEWER CATCH BASINS AND MANHOLES. ABANDON PIPING IN PLACE.
4. MAINTAIN EROSION CONTROL MEASURES AS NECESSARY AT STORMWATER INLETS AND LIMITS OF CONSTRUCTION.
5. INSTALL UNDERGROUND ELECTRICAL CONDUITS AND HIGH MAST LIGHTING.
6. REMOVE AND RESET TWO FIRE HYDRANTS.
7. PERFORM EARTHWORK ACTIVITIES: RAISE PAVEMENT RECONSTRUCTION AREA TO GRADE AND FINE GRADE.
8. CONSTRUCT PIER EXPANSION AND APPROACH SLAB. REPLACE TIMBER DECKING.
9. PLACE BITUMINOUS PAVEMENT BINDER AND SURFACE COURSES.
10. ADJUST CATCH BASIN AND MANHOLE INLETS TO GRADE AS NECESSARY.

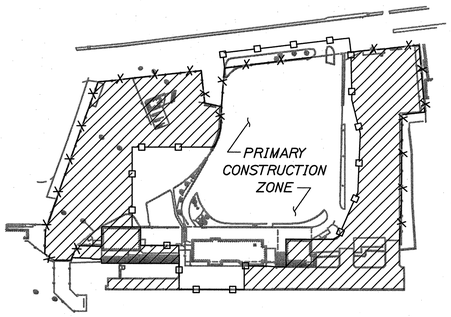

FACILITY SECURITY DIAGRAM DURING CONSTRUCTION PHASE 3

NTS

LEGEND

- CONTRACTOR WORK/STAGING AREA
- RESTRICTED AREA (NO ACCESS)
- EXISTING FACILITY SECURITY FENCING
- TEMPORARY FENCING

HNTB

STATE OF MAINE
DEPARTMENT OF TRANSPORTATION

PROJECT NUMBER 017820.00

PIN 017820.00

STATE OF MAINE ROLAND A. LAVALLEE No. 6462 LICENSED PROFESSIONAL ENGINEER

SIGNATURE

P.E. NUMBER

DATE

		BY	DATE
PROJ. MANAGER	CRAIG R. MORIN		
DESIGN-DETAILED	CRM	HME	3/25/11
CHECKED-REVIEWED	CAH	RAL	3/25/11
DESIGN2-DETAILED2	-	-	-
DESIGN3-DETAILED3	-	-	-
REVISIONS 1	-	-	-
REVISIONS 2	-	-	-
REVISIONS 3	-	-	-
REVISIONS 4	-	-	-
FIELD CHANGES	-	-	-

PORTLAND INTERNATIONAL MARINE TERMINAL IMPROVEMENTS
PORTLAND CUMBERLAND COUNTY

CONSTRUCTION PHASING PLAN III

SHEET NUMBER

C7

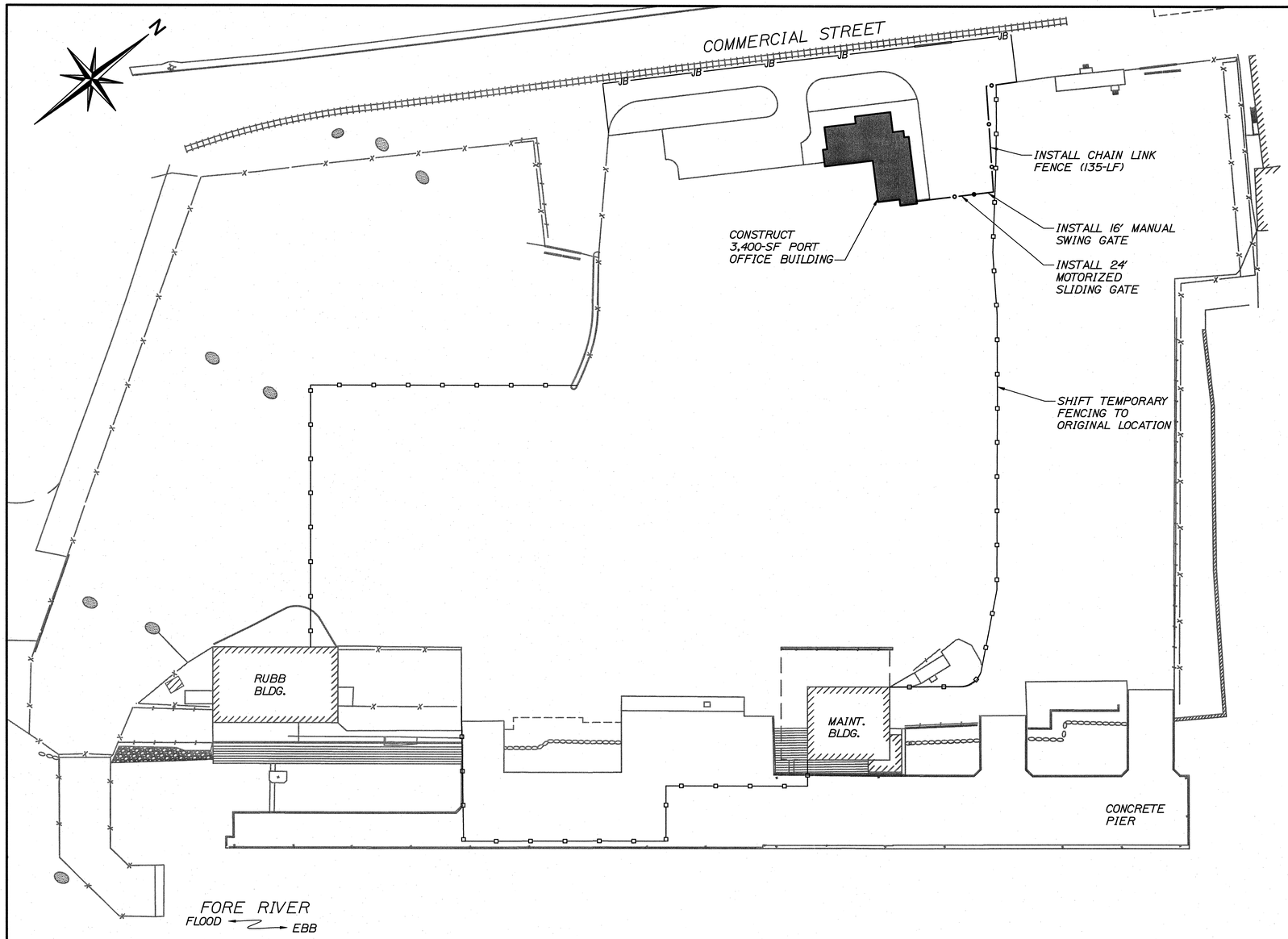

PHASE 4: CONSTRUCTION OF PORT OFFICE BUILDING

SCALE: 1"=50'-0"

25 0 50 100-FT

PHASE 4 NOTES:

1. SHIFT TEMPORARY FENCING BACK TO ORIGINAL LOCATION
2. CONSTRUCT PORT OFFICE BUILDING.
3. INSTALL CCTV SECURITY SYSTEM COMPONENTS IN NEW PORT OFFICE BUILDING. GALAXY INTEGRATED TECHNOLOGIES TO PUT SYSTEM ON LINE.
4. REMOVE AND STORE TEMPORARY CCTV SECURITY COMPONENTS AT PORT OFFICE TRAILER.
5. INSTALL PERMANENT CHAIN LINK FENCE AND GATES AT PORT OFFICE BUILDING.

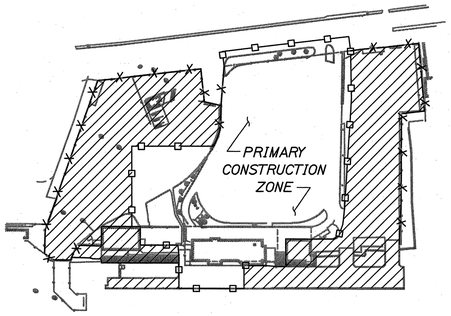

FACILITY SECURITY DIAGRAM DURING CONSTRUCTION PHASE 4

NTS

LEGEND

- CONTRACTOR WORK/STAGING AREA
- RESTRICTED AREA (NO ACCESS)
- EXISTING FACILITY SECURITY FENCING
- TEMPORARY FENCING

HNTB

STATE OF MAINE
DEPARTMENT OF TRANSPORTATION

PROJECT NUMBER 017820.00

PIN 017820.00

STATE OF MAINE
ROLAND A. LAVALLEE
No. 6452
LICENSED
PROFESSIONAL ENGINEER

PROJ. MANAGER	CRAIG R. MORIN	BY	DATE
DESIGN-DETAILED	CRM	HME	3/25/11
CHECKED-REVIEWED	CAH	RAL	3/25/11
DESIGN2-DETAILED2	-	-	-
DESIGN3-DETAILED3	-	-	-
REVISIONS 1	-	-	-
REVISIONS 2	-	-	-
REVISIONS 3	-	-	-
REVISIONS 4	-	-	-
FIELD CHANGES	-	-	-

SIGNATURE 6452
P.E. NUMBER 3/25/11
DATE

PORTLAND INTERNATIONAL
MARINE TERMINAL IMPROVEMENTS
PORTLAND CUMBERLAND COUNTY

CONSTRUCTION
PHASING PLAN IV

SHEET NUMBER

C8

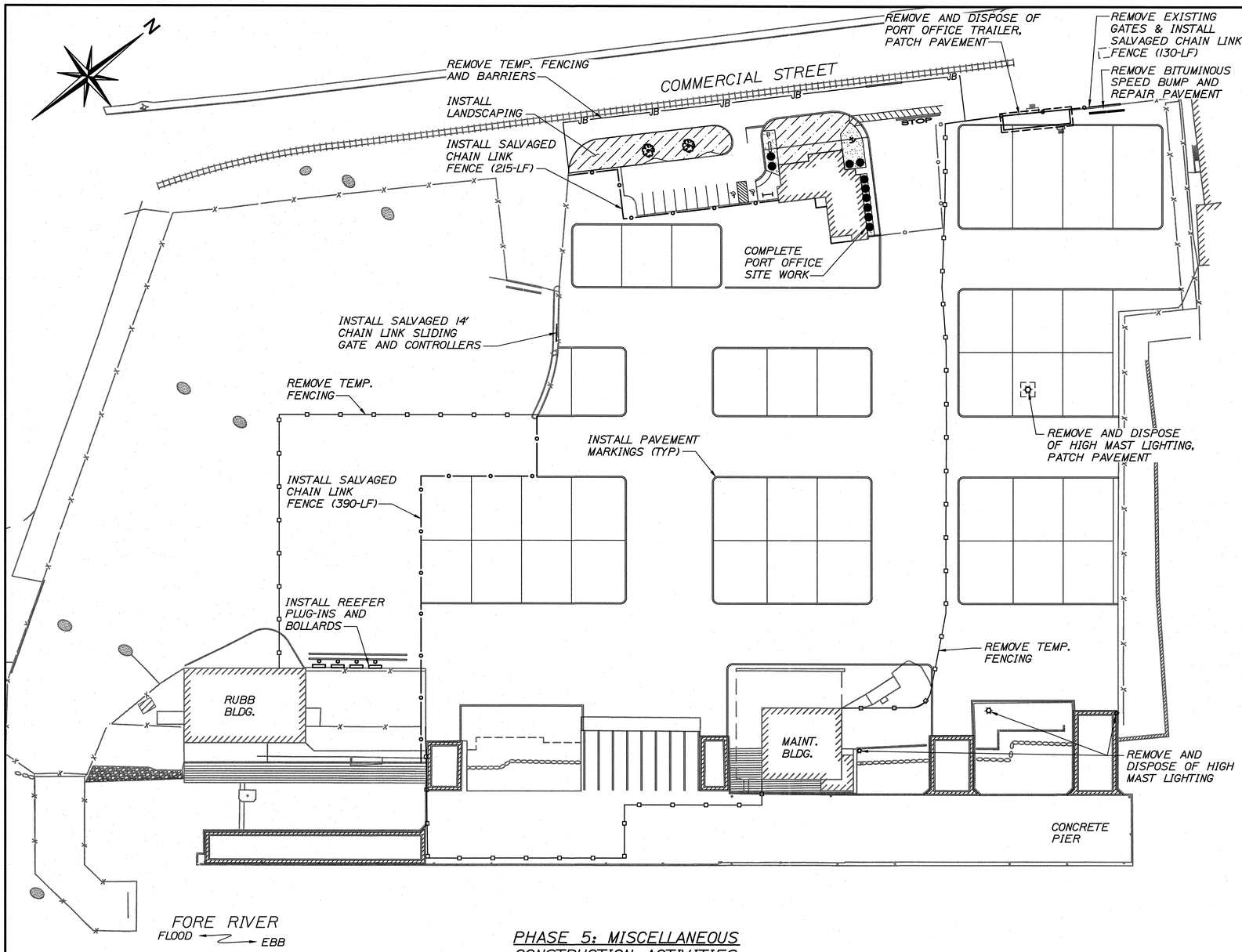

PHASE 5: MISCELLANEOUS CONSTRUCTION ACTIVITIES

SCALE: 1"=50'-0"

25 0 50 100-FT

PHASE 5 NOTES:

1. TERMINATE PORT OFFICE TRAILER UTILITIES.
2. TERMINATE REMAINING US CUSTOMS BUILDING UTILITIES.
3. REMOVE CCTV SECURITY COMPONENTS AT PORT OFFICE TRAILER AND HAND OVER TO GALAXY INTEGRATED.
4. REMOVE AND STORE CARD READERS, REMOVE AND DISPOSE OF SLIDING GATE AND BAR GATE.
5. REMOVE AND DISPOSE OF PORT OFFICE TRAILER.
6. REMOVE AND DISPOSE OF HIGH MAST LIGHTING.
7. PATCH PAVEMENT TO MATCH EXISTING PAVEMENT.
8. INSTALL SITE FEATURES AND LANDSCAPING AT PORT OFFICE BUILDING.
9. INSTALL PERMANENT FENCING.
10. INSTALL REEFER PLUG-INS AND OWNER SUPPLIED LARGE STEEL SITE BOLLARDS.
11. INSTALL PAVEMENT MARKINGS AT OFFICE PARKING LOT, WITHIN FACILITY, AND ON PIER.
12. REMOVE TEMPORARY FENCING.

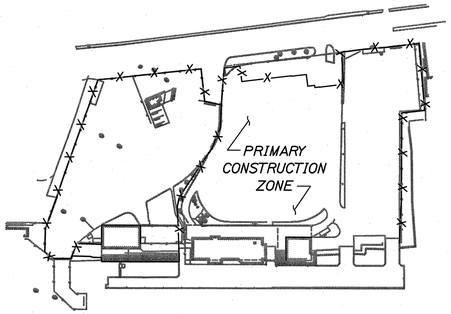

FACILITY SECURITY DIAGRAM DURING CONSTRUCTION PHASE 5

NTS

LEGEND

- CONTRACTOR WORK/STAGING AREA
- RESTRICTED AREA (NO ACCESS)
- EXISTING FACILITY SECURITY FENCING
- TEMPORARY FENCING

NOTE: TEMPORARY SECURITY MEASURES DURING THIS PHASE OF CONSTRUCTION WILL BE DETERMINED BY THE RESIDENT BASED ON THE EXTENT OF THE FINAL PUNCH LIST ITEMS TO BE COMPLETED.

HNTB

STATE OF MAINE
DEPARTMENT OF TRANSPORTATION

PROJECT NUMBER 017820.00

PIN 017820.00

STATE OF MAINE ROLAND A. LAVALLEE No. 6462 PROFESSIONAL ENGINEER

PROJ. MANAGER	CRAIG R. MORIN		
DESIGN-DETAILED	CRM	HME	3/25/11
CHECKED-REVIEWED	CAH	RAL	3/25/11
DESIGN2-DETAILED2	-	-	-
DESIGN3-DETAILED3	-	-	-
REVISIONS 1	-		-
REVISIONS 2	-		-
REVISIONS 3	-		-
REVISIONS 4	-		-
FIELD CHANGES	-		-

SIGNATURE — P.E. NUMBER — DATE

PORTLAND INTERNATIONAL MARINE TERMINAL IMPROVEMENTS
PORTLAND CUMBERLAND COUNTY

CONSTRUCTION PHASING PLAN V

SHEET NUMBER

C9

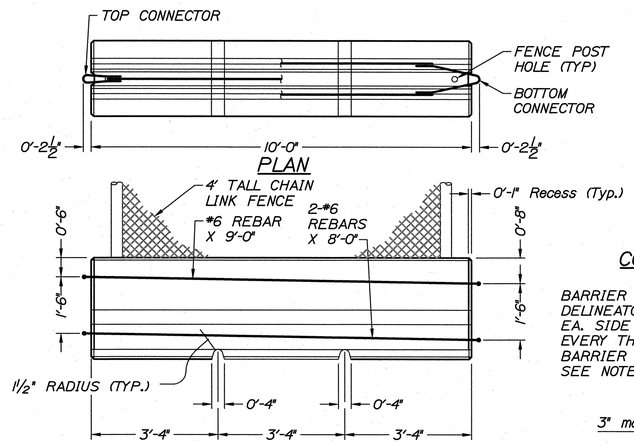

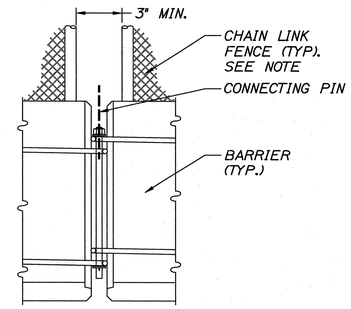

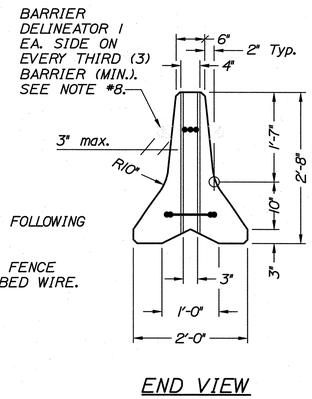

NOTES:
CONCRETE BARRIER PER MAINEDOT STANDARD DETAILS WITH THE FOLLOWING MODIFICATION.

1. JERSEY BARRIER SHALL BE EQUIPPED WITH 4' OF CHAIN LINK FENCE SECURELY FASTENED TO TOP OF BARRICADE AND 3 STRAND BARBED WIRE.

TEMPORARY CONCRETE BARRIER
NTS

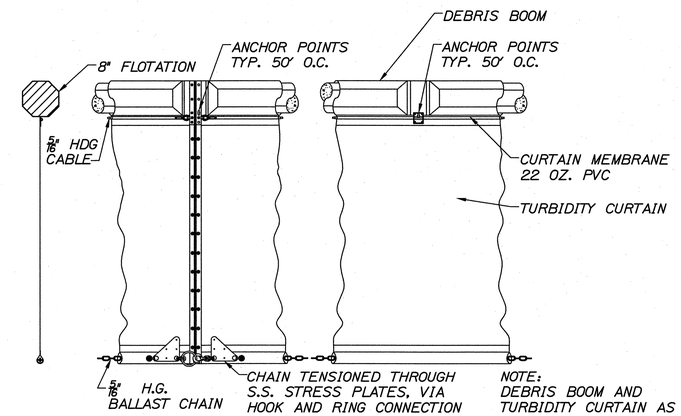

NOTE:
DEBRIS BOOM AND TURBIDITY CURTAIN AS MANUFACTURED BY ELATEC/AMERICAN MARINE OR APPROVED EQUAL

DEBRIS BOOM AND TURBIDITY CURTAIN DETAIL
NTS

HNTB

STATE OF MAINE
DEPARTMENT OF TRANSPORTATION

PROJECT NUMBER 017820.00

PIN 017820.00

STATE OF MAINE
ROLAND A. LAVALLEE
No. 6452
LICENSED PROFESSIONAL ENGINEER

	BY	DATE
PROJ. MANAGER CRAIG R. MORIN		
DESIGN-DETAILED	HME	3/25/11
CHECKED-REVIEWED	CAH	3/25/11
DESIGN2-DETAILED2	-	-
DESIGN3-DETAILED3	-	-
REVISIONS 1	-	-
REVISIONS 2	-	-
REVISIONS 3	-	-
REVISIONS 4	-	-
FIELD CHANGES	-	-

SIGNATURE 6452
P.E. NUMBER 3/25/11
DATE

PORTLAND INTERNATIONAL
MARINE TERMINAL IMPROVEMENTS
PORTLAND CUMBERLAND COUNTY

CONSTRUCTION
PHASING DETAILS

SHEET NUMBER
C10

DEMOLITION NOTES

1. THE CONTRACTOR SHALL SUBMIT A DEMOLITION PLAN TO THE RESIDENT AT LEAST 21 DAYS PRIOR TO THE START OF DEMOLITION WORK. THE PLAN SHALL OUTLINE THE METHODS AND EQUIPMENT TO BE USED TO REMOVE AND DISPOSE OF ALL MATERIALS. CONTRACTOR TO COORDINATE DEMOLITION WITH CONSTRUCTION PHASING PLANS.

2. THE LIMITS SHOWN ON THIS PLAN ARE APPROXIMATE. ACTUAL LIMITS AND FIELD CONDITIONS MAY VARY FROM THOSE SHOWN AND MUST BE FIELD VERIFIED BY THE CONTRACTOR PRIOR TO DEMOLITION. ANY INCONSISTENCIES TO THESE PLANS SHOULD BE BROUGHT TO THE ATTENTION OF THE RESIDENT BY THE CONTRACTOR AS SOON AS REALIZED.

3. ANY DAMAGE TO EXISTING STRUCTURES TO REMAIN CAUSED BY THE CONTRACTOR'S EQUIPMENT, PERSONNEL OR OPERATIONS SHALL BE REPAIRED TO THE SATISFACTION OF THE RESIDENT. ALL WORK, EQUIPMENT AND MATERIALS REQUIRED TO MAKE REPAIRS SHALL BE AT THE CONTRACTOR'S EXPENSE.

4. DEMOLITION MATERIAL DISPOSAL SHALL BE IN ACCORDANCE WITH ALL LOCAL, STATE AND FEDERAL REGULATIONS AND ALL MATERIALS SHALL BE DISPOSED OF IN A LEGAL MANNER.

5. ALL EXISTING FOUNDATIONS, UNLESS OTHERWISE NOTED, SHALL BE REMOVED TO DEPTH OF 3' BELOW FINISHED GRADES AND SHALL BE BACKFILLED WITH GRANULAR BORROW AND COMPACTED AS OUTLINED IN THE SPECIFICATIONS.

6. ALL EXISTING PILES LOCATED BENEATH THE IMT BUILDING SHALL BE CUT TO WITHIN 3' OF GRADE OR MUDLINE UNLESS OTHERWISE NOTED. IN THE EVENT EXISTING PILES INTERFERE WITH PROPOSED PILES IT MAY BE NECESSARY TO COMPLETELY REMOVE EXISTING PILES.

7. EXISTING T-1 COMMUNICATION LINE SHALL NOT BE DISTURBED.

8. THE UTILITIES INVOLVED IN THIS PROJECT ARE AS FOLLOWS:
   ELECTRICAL: CENTRAL MAINE POWER
   WATER: PORTLAND WATER DISTRICT (PWD)
   SEWER: PORTLAND PUBLIC WORKS DEPARTMENT
   GAS: NORTHERN UTILITIES
   CCTV: GALAXY INTEGRATED TECHNOLOGIES
   TI: FAIRPOINT COMMUNICATIONS
   FIRE: CITY OF PORTLAND FIRE DEPARTMENT (PFD)
   TELEPHONE: FAIRPOINT COMMUNICATIONS

9. CONTRACTOR SHALL CONTACT RESPECTIVE UTILITY OWNERS PRIOR TO ADJUSTMENT TO DETERMINE LIMITS OF WORK REQUIRED FOR EACH UTILITY.

10. CONTRACTOR SHALL CONTACT DIG-SAFE PRIOR TO START OF WORK TO VERIFY ALL UTILITIES.

11. THE EXISTING CLOSED CIRCUIT TV MONITORING SYSTEM AND SATELLITE DISH MUST REMAIN ONLINE AT ALL TIMES. RELOCATION OF THE SECURITY MONITORING SYSTEM MUST BE ACCOMPLISHED AND FULLY OPERATIONAL PRIOR TO DEMOLITION OF THE TERMINAL BUILDING AND THE PORT OFFICE TRAILER. CONTRACTOR TO COORDINATE WITH GALAXY INTEGRATED PRIOR TO DEMOLITION.

12. THE ELECTRICAL CONTROLS FOR THE SANITARY SEWER PUMP STATION ARE LOCATED WITHIN THE U.S. CUSTOMS BUILDING AND MUST REMAIN OPERATIONAL UNTIL THE NEW SANITARY SERVICE FOR THE MAINTENANCE BUILDING IS FULLY FUNCTIONAL.

13. REMOVAL OF THE PORT OFFICE TRAILER TO COMMENCE UPON OWNER'S ACCEPTANCE OF THE NEW PORT OFFICE BUILDING AND RELOCATION OF ASSOCIATED UTILITIES, SECURITY SYSTEM AND ACCESS CONTROL SYSTEMS.

14. THE CONTRACTOR ACCESS IS LIMITED TO THE AREA WITHIN THE TEMPORARY FENCING LIMITS SO AS TO NOT INTERFERE WITH DAILY OPERATIONS OF PORT FACILITY. IN THE EVENT ACCESS BEYOND THE FENCE IS REQUIRED THE CONTRACTOR MUST FIRST OBTAIN PERMISSION FROM THE AUTHORITY PRIOR TO PROCEEDING.

15. THE CONTRACTOR SHALL SELECTIVELY DEMOLISH PORTIONS OF THE IMT BUILDING ADJACENT TO THE MAINTENANCE BUILDING AT PANEL 5. THE MAINTENANCE BUILDING ROOF AND CANOPY STRUCTURE SHALL REMAIN IN PLACE BETWEEN PANELS 1-5. SEE SHEET C12.

16. CONTRACTOR SHALL CONTACT ALL APPROPRIATE UTILITIES TO ARRANGE FOR TERMINATION AND REMOVAL OF UTILITY OWNED EQUIPMENT (CENTRAL MAINE POWER, NORTHERN UTILITIES, PWD, GALAXY INTEGRATED AND PFD)

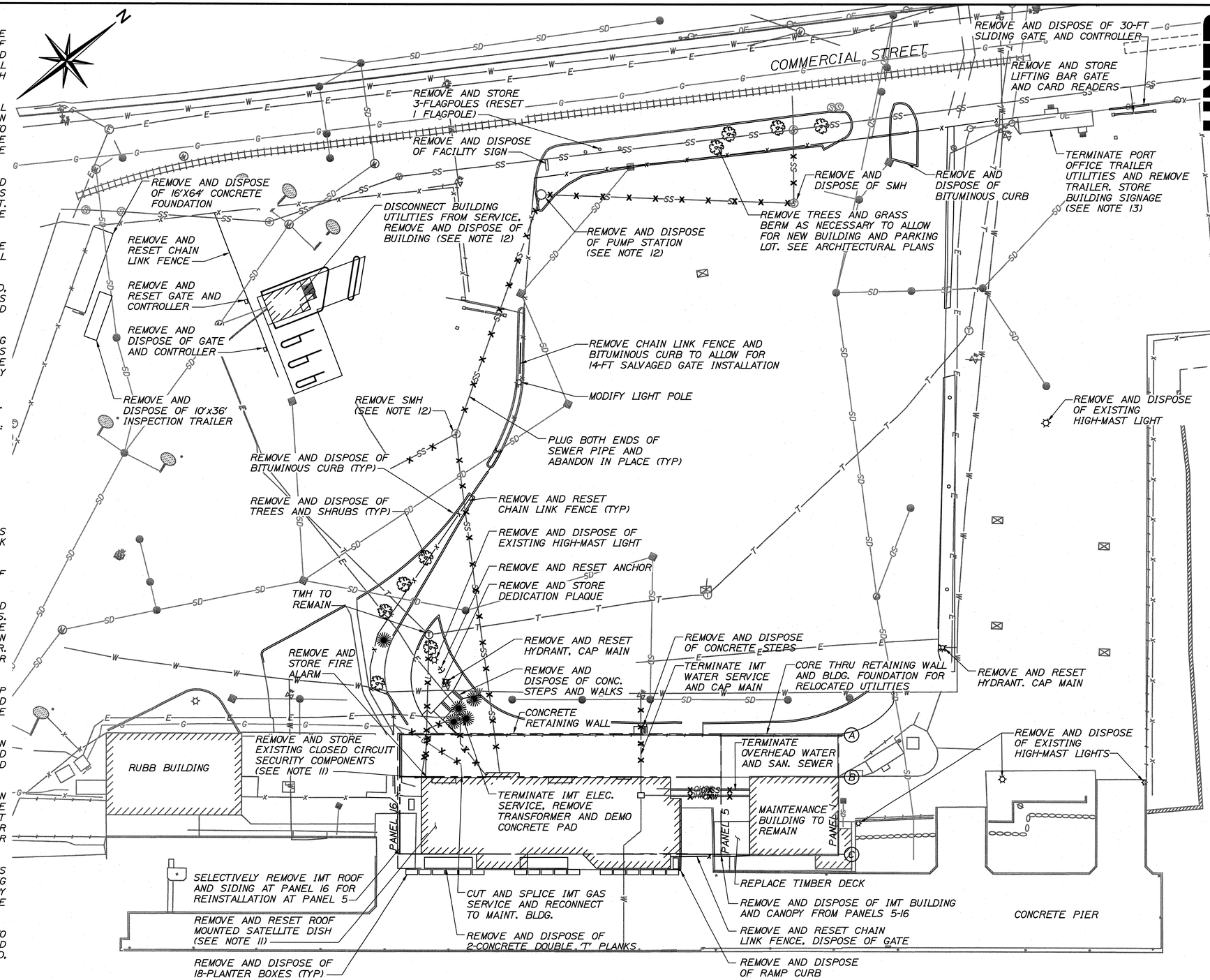

NOTE:
TERMINATE ALL IMT BUILDING UTILITIES AND RECONNECT OR INSTALL NEW SERVICES TO MAINTENANCE BUILDING PRIOR TO START OF SUBSEQUENT PHASE

SITE DEMOLITION PLAN
SCALE: 1"=40'-0"

20 0 40 80-FT

HNTB

STATE OF MAINE
DEPARTMENT OF TRANSPORTATION

PROJECT NUMBER 017820.00

PIN 017820.00

STATE OF MAINE ROLAND A. LAVALLEE No. 8452 LICENSED PROFESSIONAL ENGINEER

		DATE
P.E. NUMBER		
SIGNATURE		3/25/11
DATE		3/25/11

PROJ. MANAGER	CRAIG R. MORIN	BY
DESIGN-DETAILED	HME	HME
CHECKED-REVIEWED	CRM	RAL
DESIGN2-DETAILED2	-	-
DESIGN3-DETAILED3	-	-
REVISIONS 1	-	-
REVISIONS 2	-	-
REVISIONS 3	-	-
REVISIONS 4	-	-
FIELD CHANGES	-	-

PORTLAND INTERNATIONAL
MARINE TERMINAL IMPROVEMENTS
PORTLAND CUMBERLAND COUNTY

SITE DEMOLITION PLAN

SHEET NUMBER
C11

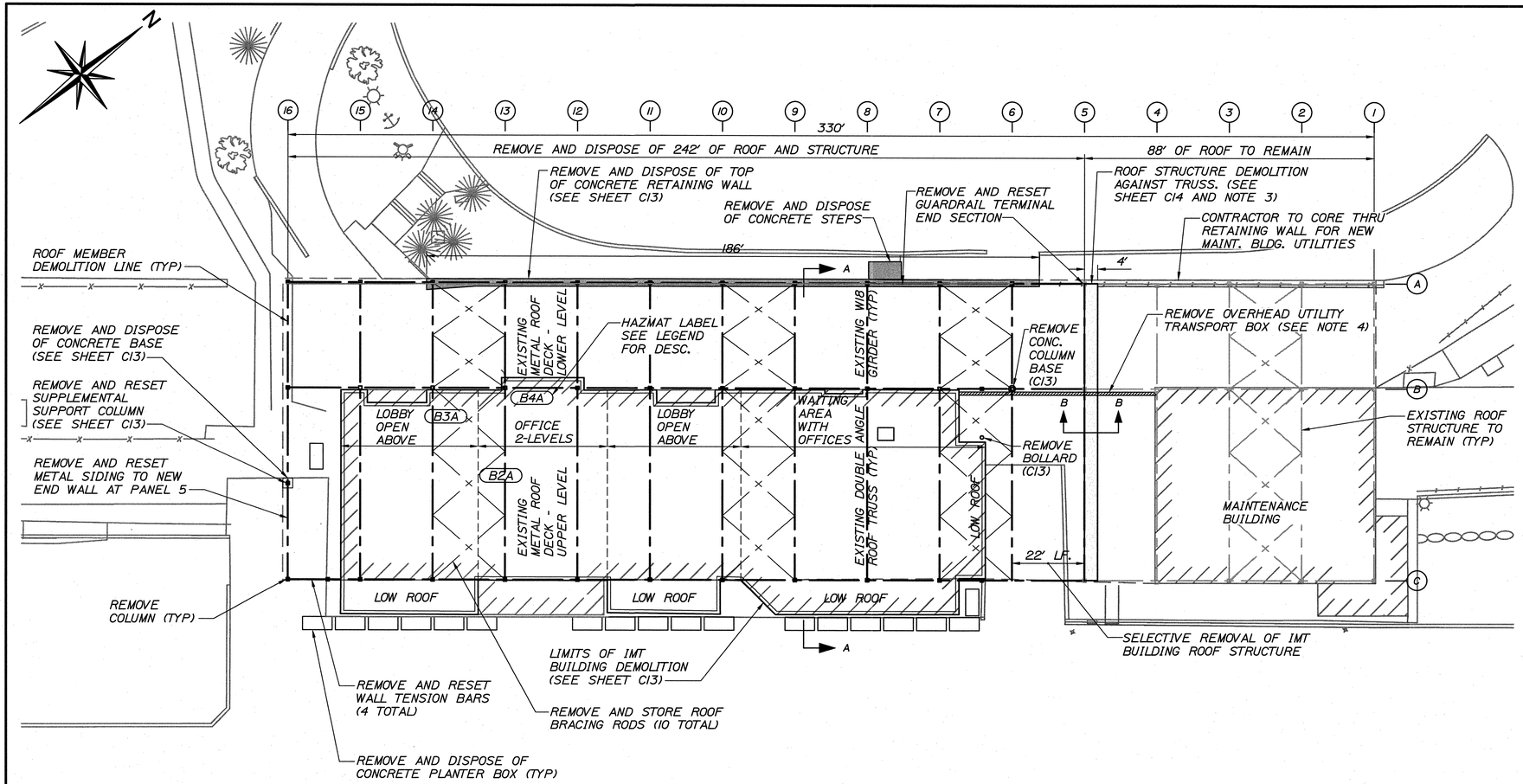

IMT BUILDING STRUCTURAL DEMOLITION PLAN

SCALE: 1"=20'-0"

10 0 20 40–FT

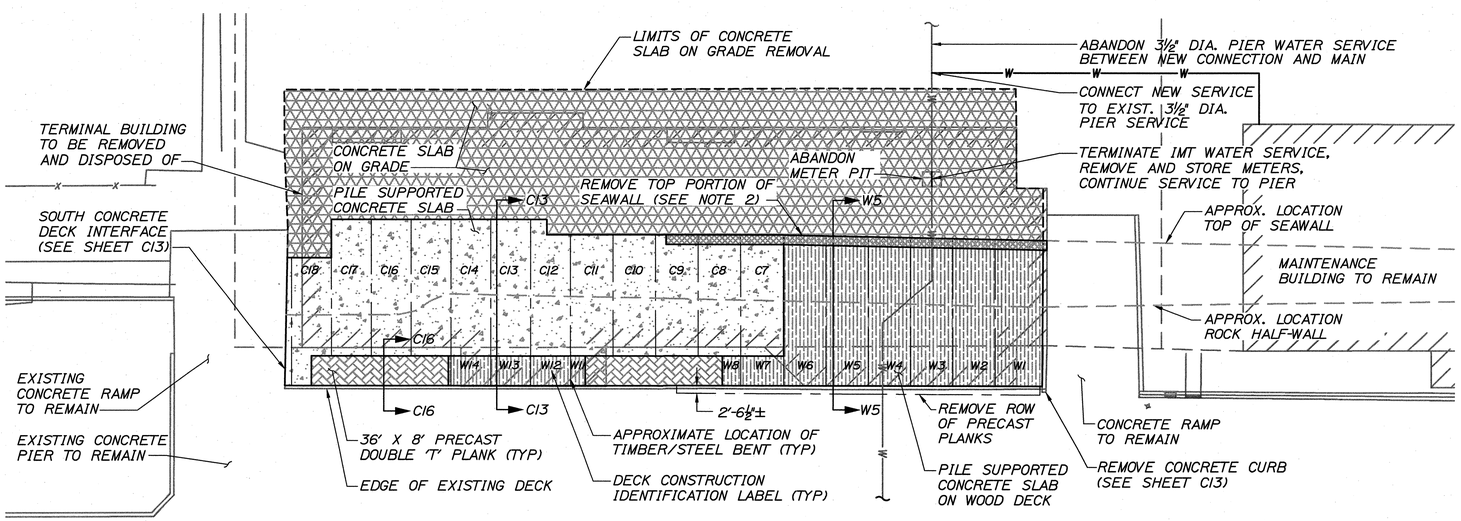

IMT BUILDING DECK DEMOLITION PLAN

SCALE: 1"=20'-0"

10 0 20 40–FT

STRUCTURAL DEMOLITION NOTES:

1. SPRINKLER SYSTEM PIPING BETWEEN PANEL 1 AND PANEL 5 AND COLUMNS A-C SHALL BE RECONNECTED TO NEW MAINTENANCE BUILDING SPRINKLER SERVICE. SEE SHEET C18.

2. EXACT LOCATION OF SANITARY SEWER AND WATER SERVICE AND EXTENTS WITHIN STRUCTURE UNKNOWN.

3. DEMOLITION OF STRUCTURE REQUIRES STRUCTURAL SUPPORT MODIFICATIONS TO REMAIN STABLE. CONTRACTOR TO COORDINATE WORK WITH APPROPRIATE CONTRACTOR DURING DEMOLITION. WORK MUST BE COMPLETED PRIOR TO REMOVING FRAMING AT COLUMN LINES 6 AND 7.

4. OVERHEAD UTILITY BOX TO REMAIN IN SERVICE UNTIL NEW SANITARY SEWER AND WATER CONNECTIONS TO MAINTENANCE BUILDING ARE INSTALLED AND OPERATIONAL.

5. CONTRACTOR TO COORDINATE COMPLETE REMOVAL OF SECURITY SYSTEM (CCTV CAMERAS AND ROOF MOUNTED SATELLITE DISH) WITH GALAXY INTEGRATED TECHNOLOGIES PRIOR TO DEMOLITION. ALL EQUIPMENT SHALL BE SALVAGED AND PROVIDED TO THE OWNER.

6. SEE ASBESTOS ABATEMENT REPORT LOCATED IN THE APPENDIX OF THE SPECIFICATIONS FOR THE EXACT LOCATION, DESCRIPTION AND QUANTITY OF HAZMAT'S.

7. ALL STRUCTURAL STEEL CONTAINS LEAD PAINT. PROPER HANDLING OF MATERIALS IS REQUIRED AND SHALL FOLLOW ALL FEDERAL, STATE AND LOCAL REQUIREMENTS FOR HANDLING AND DISPOSAL.

DECK DEMOLITION NOTES:

1. CONTRACTOR SHALL USE EXTREME CAUTION DURING DEMOLITION ACTIVITIES TO NOT DAMAGE EXISTING CONCRETE STRUCTURES TO REMAIN. IN EVENT DAMAGE TO RAMPS OR PIER OCCURS THE CONTRACTOR SHALL REPLACE OR REPAIR TO THE SATISFACTION OF THE OWNER AT NO ADDITIONAL EXPENSE.

2. CONTRACTOR SHALL SELECTIVELY DEMOLISH THE TOP PORTION OF THE EXISTING SEAWALL TO ALLOW FOR THE NEW PIER CONSTRUCTION. THE ANTICIPATED LIMITS OF REMOVAL REQUIRE MODIFICATIONS TO THE CAST IN PLACE CONCRETE CAP ATOP THE ORIGINAL GRANITE MASONRY AND ALSO SEVERAL ROWS OF BRICK BLOCKING.

3. HEAVY CONSTRUCTION EQUIPMENT MUST REMAIN A MINIMUM OF 20-FT BEHIND THE SEAWALL DURING DECK DEMOLITION UNLESS APPROVED BY THE RESIDENT.

4. REFER TO SECTION 31 62 17 FOR ADDITIONAL INFORMATION RELATED TO THE EXISTING SEAWALL.

FOUNDATION DEMOLITION NOTES:

1. CONTRACTOR SHALL SELECTIVELY REMOVE TOP PORTIONS OF EXISTING CONCRETE FOUNDATIONS TO A DEPTH OF 3 FEET BELOW FINISH GRADE. SEE DETAIL 5 SHEET C14.

2. IF PILES ARE PRESENT BENEATH THE EXISTING IMT BUIDING, A PILE LAYOUT SURVEY SHALL BE CONDUCTED PRIOR TO PIER PILE INSTALLATION TO DETERMINE WHICH, IF ANY, PILES INTERFERE WITH PILE INSTALLATION. SOME EXISTING PILES MAY REQUIRE EXTRACTION TO FACILITATE PILE INSTALLATION.

HAZARDOUS MATERIAL QUANTITY LIST:

SAMPLE	MATERIALS
B2A	ASBESTOS MASTIC ADHESIVE 14-STAIR RISERS 35-SF STAIRWELL LANDING
B3A	ASBESTOS VINYL FLOOR TILE 215-SF
B4A	ASBESTOS VINYL FLOOR TILE 20-SF
NS-1	HOT AIR SYSTEM EXPANSION GASKETS
NS-2	MERCURY VAPOR/METAL HALIDE LIGHT TUBES 148-FIXTURES, 2-4 LIGHTS/FIXTURE
NS-3	MERCURY THERMOSTAT TUBES 20-LOCATIONS +/-
NS-4	BATTERY PACKS/LIGHT TUBES AT ALL EXIT & EMERGENCY LIGHTS
NS-5	POSSIBLE PCB BALLAST ALL LIGHT TUBES
LEAD PAINT	EXTERIOR COLUMNS OF IMT BUILDING

(NS) 'NOT SAMPLED'

LEGEND

- CONCRETE SLAB ON WOOD DECK REMOVAL
- CONCRETE SLAB REMOVAL
- CONCRETE SLAB ON GRADE REMOVAL
- PRECAST DOUBLE 'T' PLANK REMOVAL
- SEAWALL TOP SELECTIVE REMOVALS

WI CONCRETE WITH WOOD DECK LABEL
CI CONCRETE ONLY DECK LABEL

HNTB

STATE OF MAINE
DEPARTMENT OF TRANSPORTATION

PROJECT NUMBER 017820.00

PIN 017820.00

STATE OF MAINE ROLAND A. LAVALLEE No. 6452 PROFESSIONAL ENGINEER LICENSED

P.E. NUMBER 6452

DATE 3/25/11

SIGNATURE

	BY	DATE
PROJ. MANAGER CRAIG R. MORIN		
DESIGN-DETAILED	HME	3/25/11
CHECKED-REVIEWED	CAH	3/25/11
DESIGN2-DETAILED2	-	-
DESIGN3-DETAILED3	-	-
REVISIONS 1	-	-
REVISIONS 2	-	-
REVISIONS 3	-	-
REVISIONS 4	-	-
FIELD CHANGES	-	-

PORTLAND INTERNATIONAL
MARINE TERMINAL IMPROVEMENTS
PORTLAND CUMBERLAND COUNTY

TERMINAL BUILDING DEMOLITION PLAN

SHEET NUMBER

C12

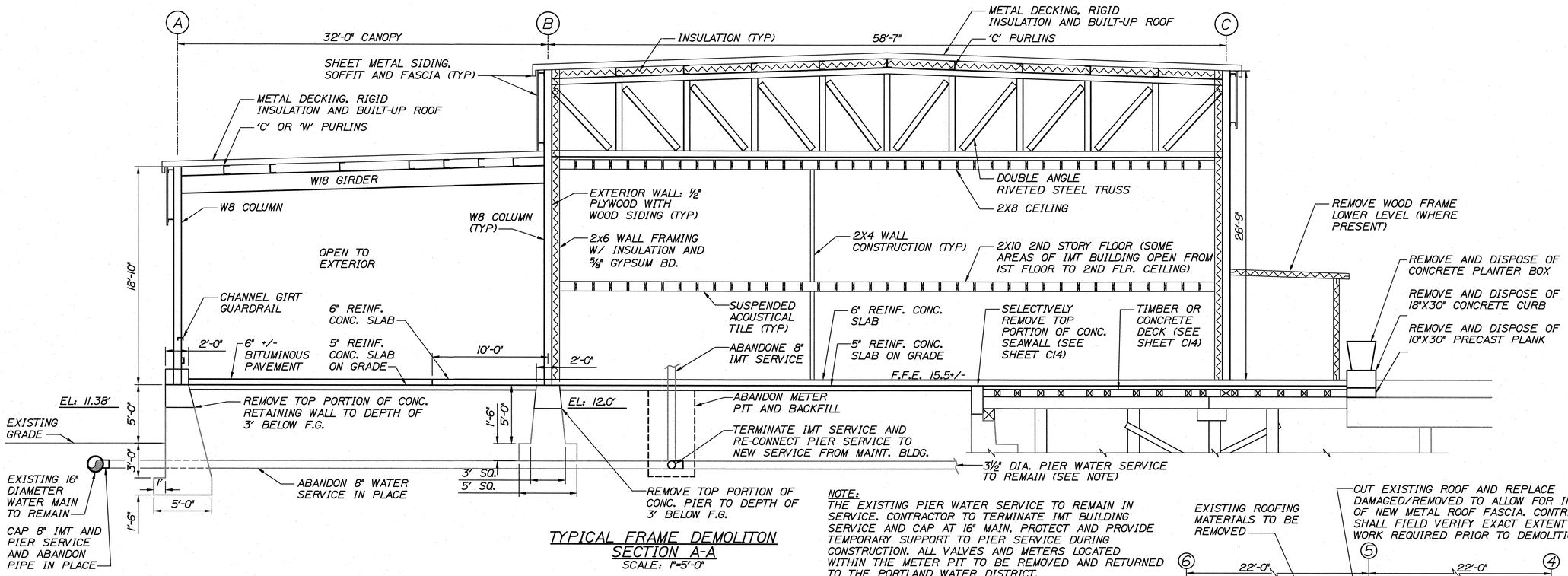

TYPICAL FRAME DEMOLITON SECTION A-A
SCALE: 1"=5'-0"

NOTE:
THE EXISTING PIER WATER SERVICE TO REMAIN IN SERVICE. CONTRACTOR TO TERMINATE IMT BUILDING SERVICE AND CAP AT 16" MAIN. PROTECT AND PROVIDE TEMPORARY SUPPORT TO PIER SERVICE DURING CONSTRUCTION. ALL VALVES AND METERS LOCATED WITHIN THE METER PIT TO BE REMOVED AND RETURNED TO THE PORTLAND WATER DISTRICT.

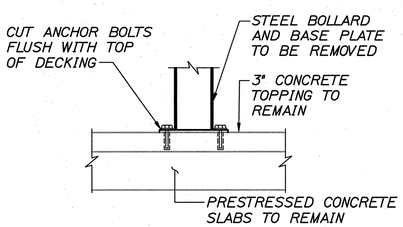

BOLLARD REMOVAL DETAIL
NTS

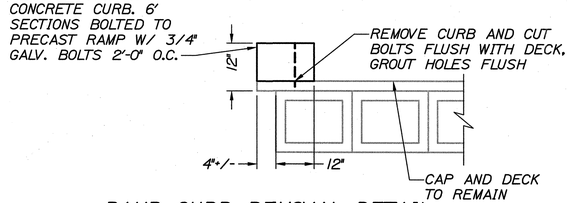

RAMP CURB REMOVAL DETAIL
NTS

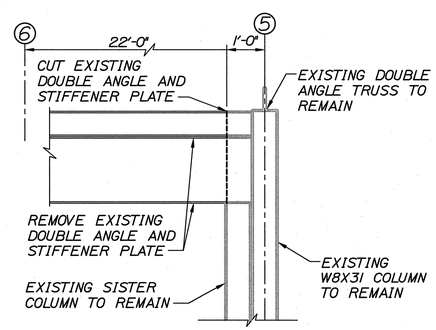

DEMOLITION AT COLUMN 5C
SCALE: ½"=1'

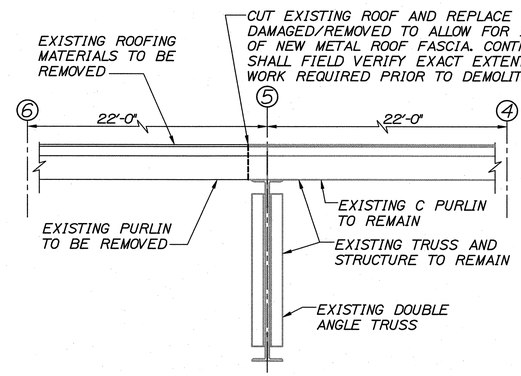

ROOF STRUCTURE DEMOLITION AGAINST TRUSS SECTION B-B
SCALE: ½"=1'

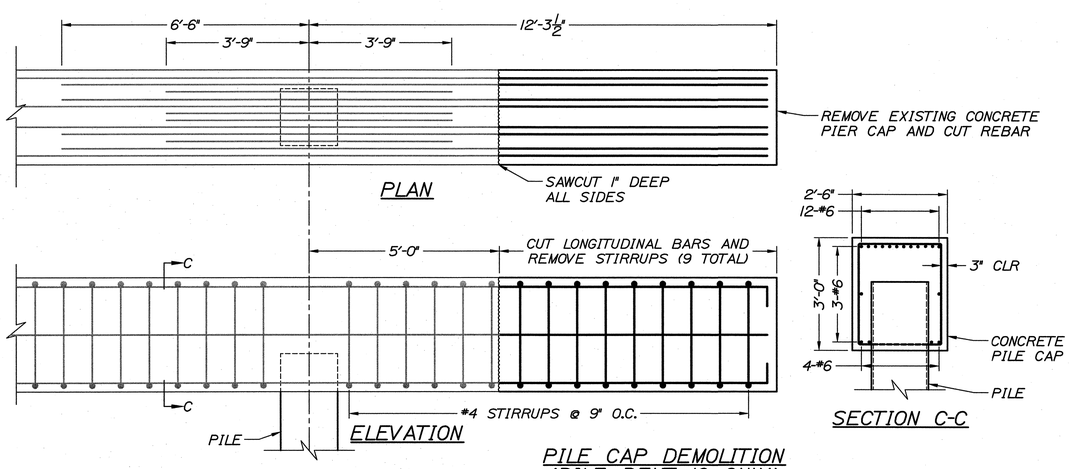

PILE CAP DEMOLITION (PILE BENT 10 ONLY)
SCALE: ½"=1'

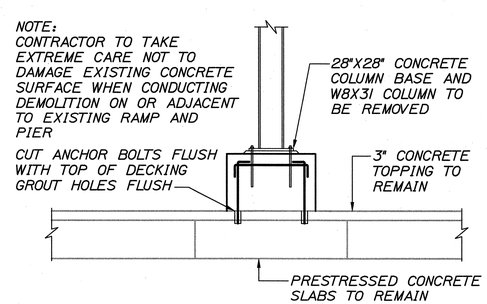

PANEL 16 & 6B COLUMN CONCRETE BASE REMOVAL
SCALE: ½"=1'

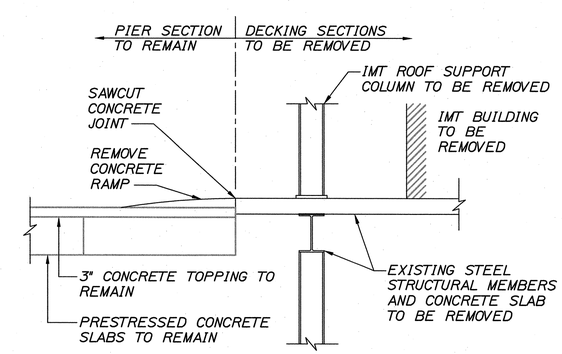

NOTE:
CONTRACTOR TO TAKE EXTREME CARE NOT TO DAMAGE EXISTING CONCRETE SURFACE WHEN CONDUCTING DEMOLITION ON OR ADJACENT TO EXISTING RAMP AND PIER

SOUTH CONCRETE DECK INTERFACE
SCALE: ½"=1'

HNTB

STATE OF MAINE
DEPARTMENT OF TRANSPORTATION

PROJECT NUMBER 017820.00

PIN 017820.00

STATE OF MAINE ROLAND A. LAVALLEE No. 6462 LICENSED PROFESSIONAL ENGINEER

SIGNATURE		
P.E. NUMBER		
DATE		

PROJ. MANAGER	CRAIG R. MORIN	
DESIGN-DETAILED	HME	3/25/11
CHECKED-REVIEWED	CAH	3/25/11
DESIGN2-DETAILED2	-	-
DESIGN3-DETAILED3	-	-
REVISIONS 1	-	-
REVISIONS 2	-	-
REVISIONS 3	-	-
REVISIONS 4	-	-
FIELD CHANGES	-	-

PORTLAND INTERNATIONAL MARINE TERMINAL IMPROVEMENTS
PORTLAND CUMBERLAND COUNTY

TERMINAL BUILDING DEMOLITION DETAILS I

SHEET NUMBER
C13

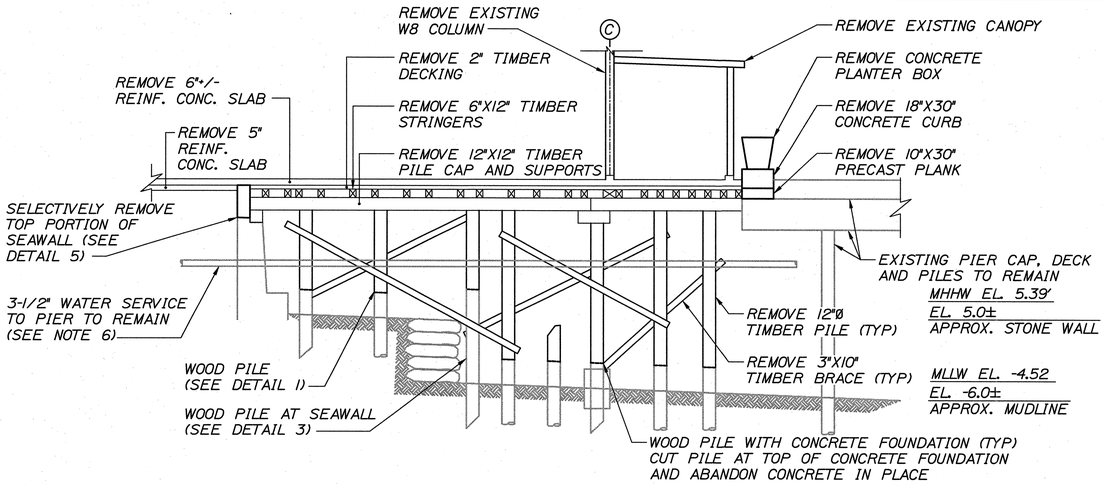

SECTION W5-W5
NTS

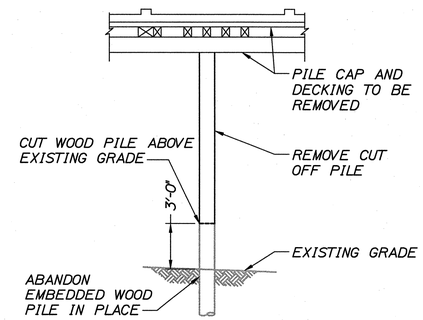

DETAIL 1
NTS

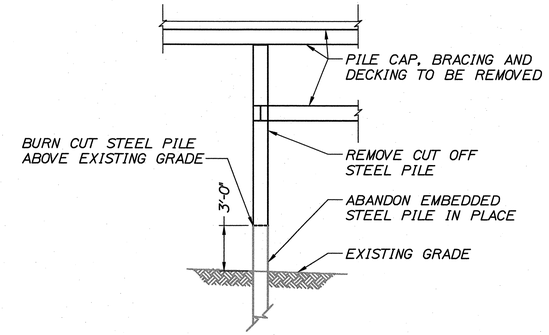

DETAIL 2
NTS

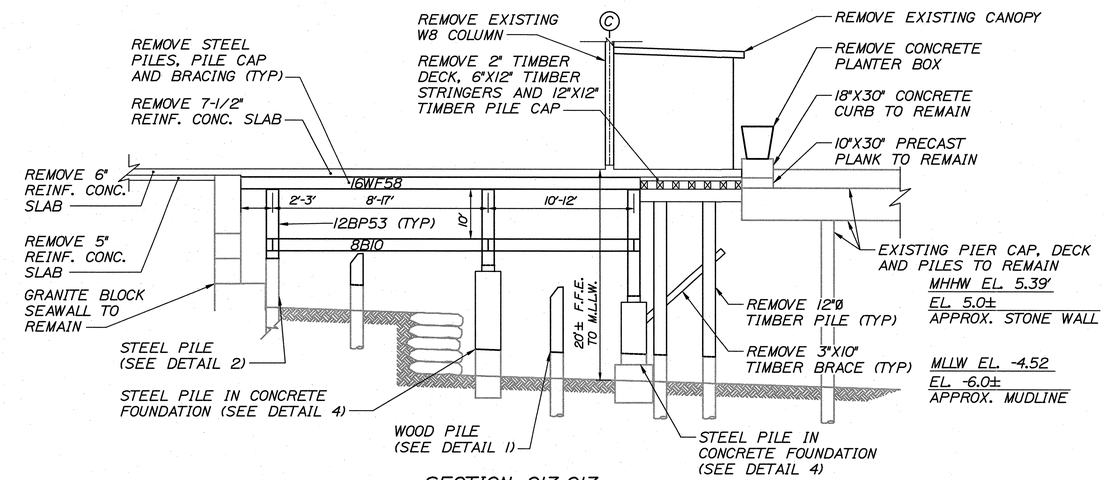

SECTION C13-C13
NTS

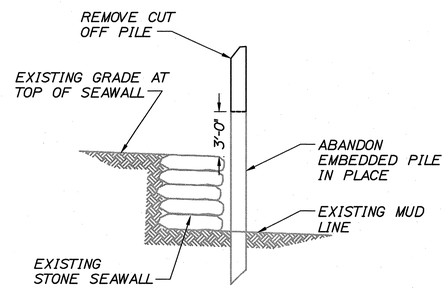

DETAIL 3
NTS

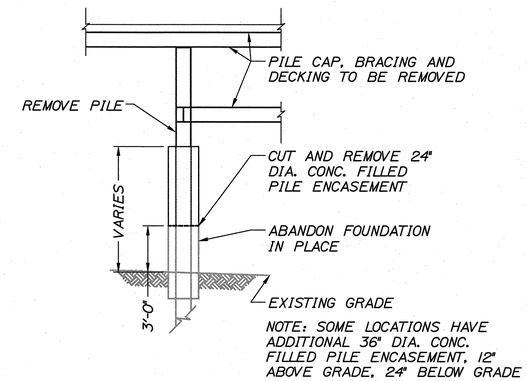

DETAIL 4
NTS

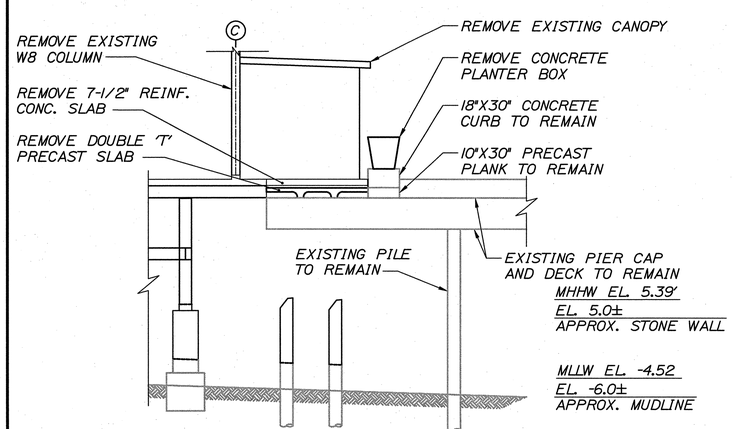

SECTION C16-C16
NTS

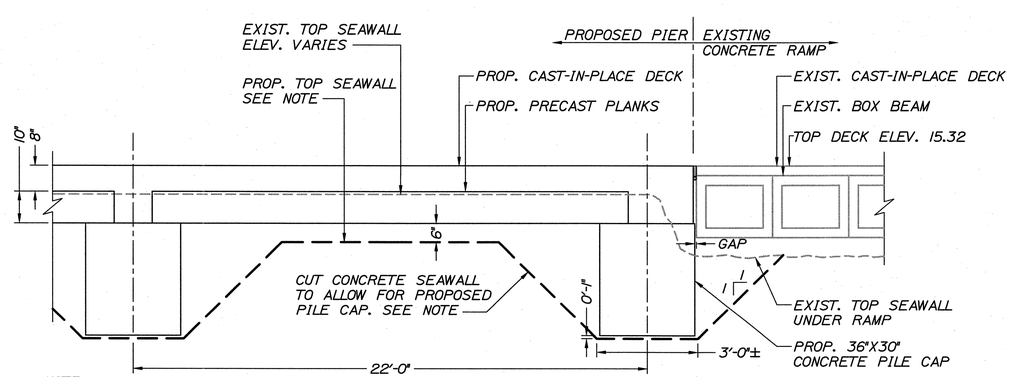

NOTE:
LOWER 100 LF. OF CONCRETE SEAWALL AND ALLOW DEEPENED POCKETS FOR PILE CAP AT 9 LOCATIONS (BASE BID). SEAWALL MODIFICATIONS MAY BE CONDUCTED BY USE OF 15-30 LB. HANDHELD CHIPPING HAMMER AT CONTRACTOR'S OPTION. GRANITE BLOCKS ENCOUNTERED IN THE SEAWALL MAY BE CHIPPED OUT AND REMOVED AS NECESSARY.

DETAIL 5
NTS

DEMOLITION NOTES:

1. ALL TIMBER AND STEEL PILES ENCOUNTERED SHALL BE CUT OFF APPROXIMATELY 3' ABOVE MUD LINE AND REMAINING EMBEDDED PORTION MAY BE ABANDONED IN PLACE. THERE ARE AN ESTIMATED 70 TIMBER PILES AND 45 STEEL PILES.

2. CONTRACTOR MAY BE REQUIRED TO REMOVE TIMBER PILES COMPLETELY WHERE CONFLICT WITH FUTURE PILES OCCURS. OCCURRENCE IS ESTIMATED TO BE AT 5 LOCATIONS.

3. CONCRETE PILE FOUNDATIONS TO BE CUT AND REMOVED 3' ABOVE GRADE AND REMAINING CONCRETE FOUNDATION MAY BE ABANDONED IN PLACE.

4. IN LOCATIONS WHERE PILES ARE EMBEDDED WITHIN THE CONCRETE SEAWALL CUT PILE AS CLOSE TO CONCRETE AS POSSIBLE.

5. IN LOCATIONS WHERE PILES ARE LOCATED AT FACE OF STONE SEAWALL PILES SHALL BE CUT 3' ABOVE TOP OF FOOTING ELEVATION.

6. 3-1/2" WATER SERVICE TO PIER TO REMAIN IN SERVICE. SUPPORT PIPE WITH TEMPORARY BRACING TO THE SATISFACTION OF THE RESIDENT.

HNTB

STATE OF MAINE
DEPARTMENT OF TRANSPORTATION

PROJECT NUMBER 017820.00

PIN 017820.00

STATE OF MAINE ROLAND A. AVALLEE No. 6452 LICENSED PROFESSIONAL ENGINEER

P.E. NUMBER 6452
DATE 3/25/11

		BY	DATE
PROJ. MANAGER	CRAIG R. MORIN		
DESIGN-DETAILED	HME	HME	3/25/11
CHECKED-REVIEWED	CAH	RAL	3/25/11
DESIGN2-DETAILED2	-	-	-
DESIGN3-DETAILED3	-	-	-
REVISIONS 1	-	-	-
REVISIONS 2	-	-	-
REVISIONS 3	-	-	-
REVISIONS 4	-	-	-
FIELD CHANGES	-	-	-

PORTLAND INTERNATIONAL
MARINE TERMINAL IMPROVEMENTS
PORTLAND CUMBERLAND COUNTY

TERMINAL BUILDING
DEMOLITION DETAILS II

SHEET NUMBER
C14

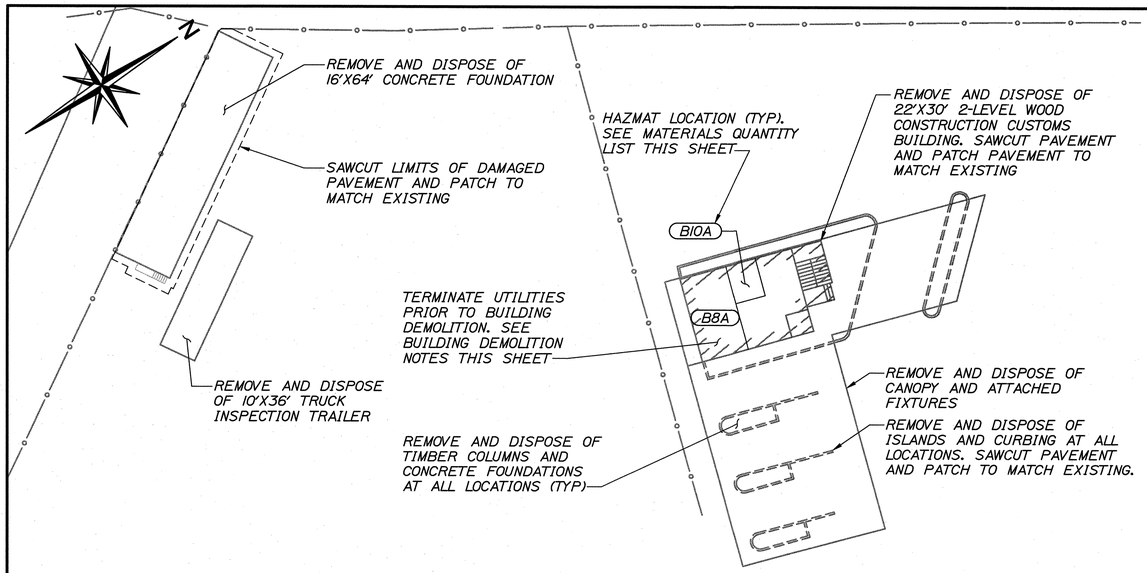

U.S. CUSTOMS BUILDING DEMOLITION PLAN

SCALE: 1"=20'-0"

10 0 20 40–FT

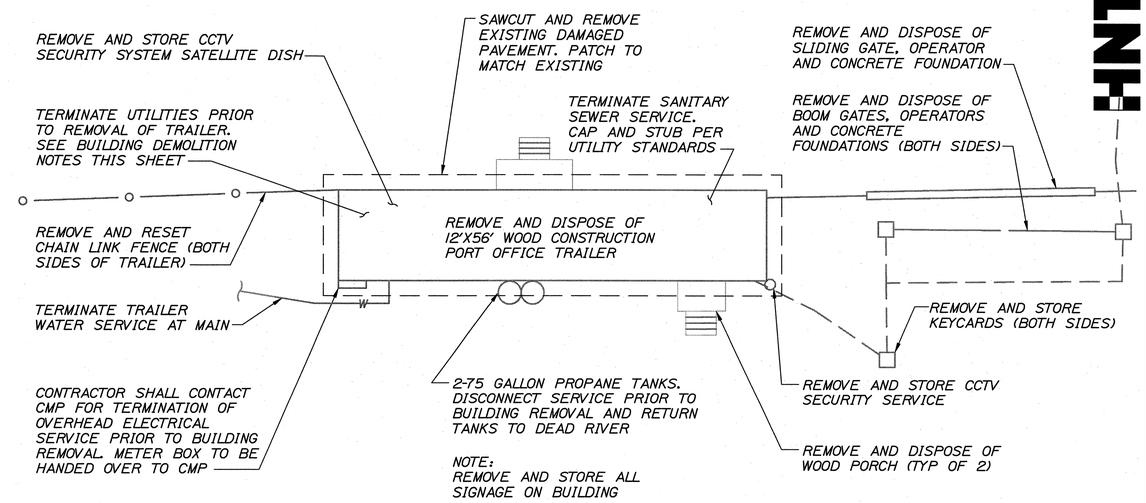

PORT OFFICE TRAILER DEMOLITION PLAN

SCALE: 1"=10'-0"

5 0 10 20–FT

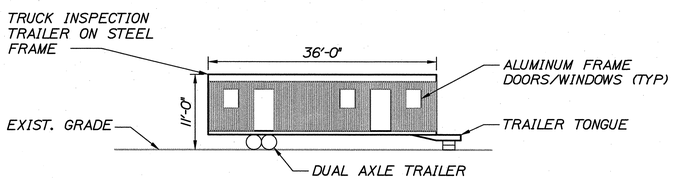

TRUCK INSPECTION TRAILER ELEVATION

SCALE: 1"=10'-0"

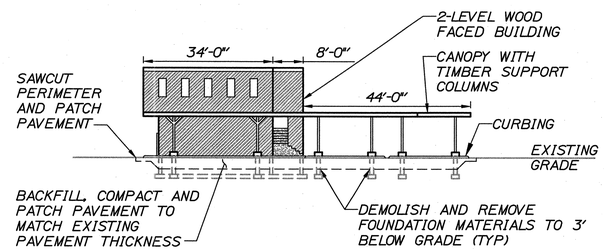

US CUSTOMS BUILDING ELEVATION

SCALE: 1"=20'-0"

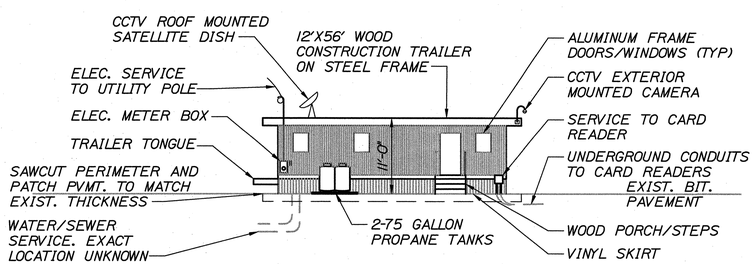

PORT OFFICE TRAILER ELEVATION

SCALE: 1"=10'-0"

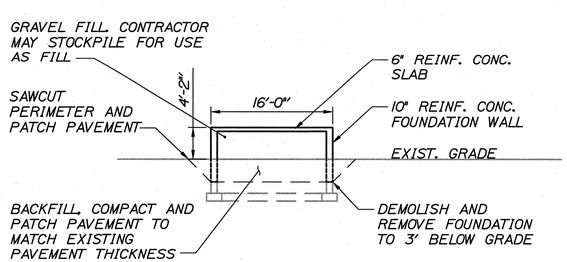

CONCRETE FOUNDATION SECTION

SCALE: 1"=10'-0"

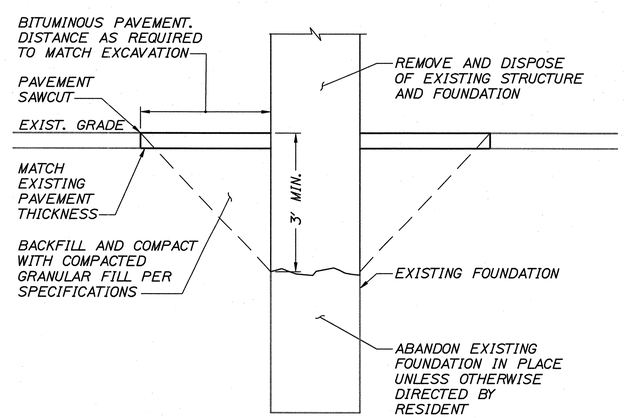

PAVEMENT PATCH DETAIL

NTS

HAZARDOUS MATERIAL QUANTITY LIST:

SAMPLE	MATERIALS
B8A	ASBESTOS VINYL FLOOR TILE 275-SF
B10A	ASBESTOS VINYL FLOOR TILE 80-SF

BUILDING DEMOLITION NOTES:

1. CONTRACTOR SHALL CONTACT CENTRAL MAINE POWER TO DISCONNECT POWER SERVICE PRIOR TO DEMOLITION AND REMOVAL OF PORT OFFICE TRAILER AND U.S. CUSTOMS BUILDING. METERS AND OTHER UTILITY OWNED ITEMS SHALL BE TURNED OVER TO CENTRAL MAINE POWER.

2. THE EXISTING FACILITY-WIDE SECURITY SYSTEM INCLUDING SATELLITE DISH AND CCTV SECURITY COMPONENTS MUST REMAIN ONLINE AT ALL TIMES. RELOCATION OF THE NEW SECURITY MONITORING SYSTEM MUST BE COMPLETE AND FULLY OPERATIONAL PRIOR TO REMOVAL OF THE PORT OFFICE TRAILER. CONTRACTOR TO COORDINATE WITH GALAXY INTEGRATED TECHNOLOGIES PRIOR TO REMOVAL.

3. DEMOLITION OF THE PORT OFFICE TRAILER TO COMMENCE UPON OWNER'S ACCEPTANCE OF THE NEW PORT OFFICE BUILDING AND RELOCATION OF ASSOCIATED UTILITIES, SECURITY SYSTEM AND ACCESS CONTROL SYSTEMS.

4. ALL EXISTING FOUNDATIONS UNLESS OTHERWISE NOTED SHALL BE REMOVED TO A DEPTH OF 3-FT BELOW PROPOSED GRADES AND SHALL BE BACKFILLED WITH GRAVEL BORROW AND COMPACTED AS OUTLINED IN THE SPECIFICATIONS.

5. ELECTRICAL CONTROLS FOR A SANITARY SEWER PUMP STATION ARE LOCATED WITHIN THE U.S. CUSTOMS BUILDING AND MUST REMAIN OPERATIONAL UNTIL THE NEW MAINTENANCE BUILDING GRAVITY SEWER SERVICE IS OPERATIONAL.

6. TERMINATION OF WATER SERVICES AT THE U.S. CUSTOMS BUILDING AND PORT OFFICE TRAILER SHALL BE DONE IN ACCORDANCE TO PORTLAND WATER DISTRICT STANDARDS.

7. TERMINATION OF SANITARY SERVICES AT THE U.S. CUSTOMS BUILDING AND PORT OFFICE TRAILER SHALL BE DONE IN ACCORDANCE TO THE CITY OF PORTLAND, DEPARTMENT OF PUBLIC WORKS STANDARD REQUIREMENTS.

8. CONTRACTOR TO VERIFY NO UNDERGROUND GAS SERVICES ARE PRESENT AT THE U.S. CUSTOMS BUILDING AND PORT OFFICE TRAILER PRIOR TO DEMOLITION AND REMOVAL OF STRUCTURES. IF SERVICES ARE PRESENT, CONTRACTOR SHALL PROPERLY TERMINATE SERVICES IN ACCORDANCE WITH NORTHERN UTILITIES GENERAL STANDARDS.

HNTB

STATE OF MAINE
DEPARTMENT OF TRANSPORTATION

PROJECT NUMBER 017820.00

PIN 017820.00

STATE OF MAINE ROLAND A. LAVALLEE No. 6482 LICENSED PROFESSIONAL ENGINEER

P.E. NUMBER | SIGNATURE | DATE

PROJ. MANAGER	CRAIG R. MORIN	BY
DESIGN-DETAILED	HME	3/25/11
CHECKED-REVIEWED	CAH	3/25/11
DESIGN-DETAILED2	RAL	-
DESIGN-DETAILED3	-	-
REVISIONS 1	-	-
REVISIONS 2	-	-
REVISIONS 3	-	-
REVISIONS 4	-	-
FIELD CHANGES	-	-

PORTLAND INTERNATIONAL MARINE TERMINAL IMPROVEMENTS
PORTLAND CUMBERLAND COUNTY

MISCELLANEOUS DEMOLITION DETAILS

SHEET NUMBER

C15

W:\jobs\20021 - Maine Port Authority\001 - Portland Int'l Facility\CADD\PLANS\C-DETS.dwg, 3/22/2011 12:54:39 PM, rmillett

GENERAL INFORMATION

PROJECT NAME: INTERNATIONAL MARINE TERMINAL

SITE INFORMATION

LAND USE: MULTI-USE COMMERCIAL
ZONE: WPDZ WATERFRONT PORT DEVELOPMENT ZONE

CITY STANDARDS	REQUIRED	PROPOSED
MINIMUM LOT SIZE:	NONE	N/A
MINIMUM STREET FRONTAGE:	NONE	N/A
MINIMUM LOT LENGTH:	NONE	N/A
MINIMUM LOT WIDTH:	NONE	N/A
MAXIMUM FRONT YARD:	NONE	N/A
MINIMUM REAR YARD:	NONE	N/A
MINIMUM SIDE YARD:	NONE	N/A
MINIMUM PIER LINE SETBACK:	5 FT	N/A
MAXIMUM BUILDING HEIGHT:	45 FT	

PARKING

PARKING STANDARDS	REQUIRED	PROPOSED
PARKING SPACES:	9 SPACES	11 SPACES
PARKING SPACE SIZES:	9 FT X 18 FT (12 SPACES)	

AREAS

	REQUIRED	PROPOSED
MAXIMUM IMPERVIOUS SURFACE RATIO:	100%	100%

NOTES:

1. REEFER PLUG-INS ARE CURRENTLY STORED IN THE RUBB BUILDING. SUPPORT POSTS SHALL BE MODIFIED TO ALLOW FOR RE-INSTALLATION. SEE SHEET C25.

2. LARGE STEEL SITE BOLLARDS ARE CURRENTLY STORED AT THE NORTH END OF THE CONCRETE PIER.

3. 18-INDIVIDUAL CONCRETE PLANTER BOXES SHALL BE REMOVED AND DISPOSED OF.

4. THE CONTRACTOR IS RESPONSIBLE FOR PROVIDING A SECURE SITE AT ALL TIMES. THE PUBLIC SHALL NOT BE PERMITTED ON THE SITE AND CONTRACTOR ACCESS GATES SHALL BE CLOSED AT ALL TIMES AND LOCKED DURING NON-WORKING HOURS.

5. FIRE HYDRANTS SHALL BE PAINTED RED AND INSTALLED ACCORDING TO CHAPTER 10 OF CITY CODE AND PORTLAND WATER DISTRICT STANDARDS.

6. SEE SHEET C23 - ARCHITECTURAL PLAN FOR THE OFFICE BUILDING LAYOUT POINTS.

7. FOR LAYOUT OF SITE UTILITIES, SEE SHEET C18. FOR LAYOUT OF SITE ELECTRICAL, SEE SHEETS E2 AND E3.

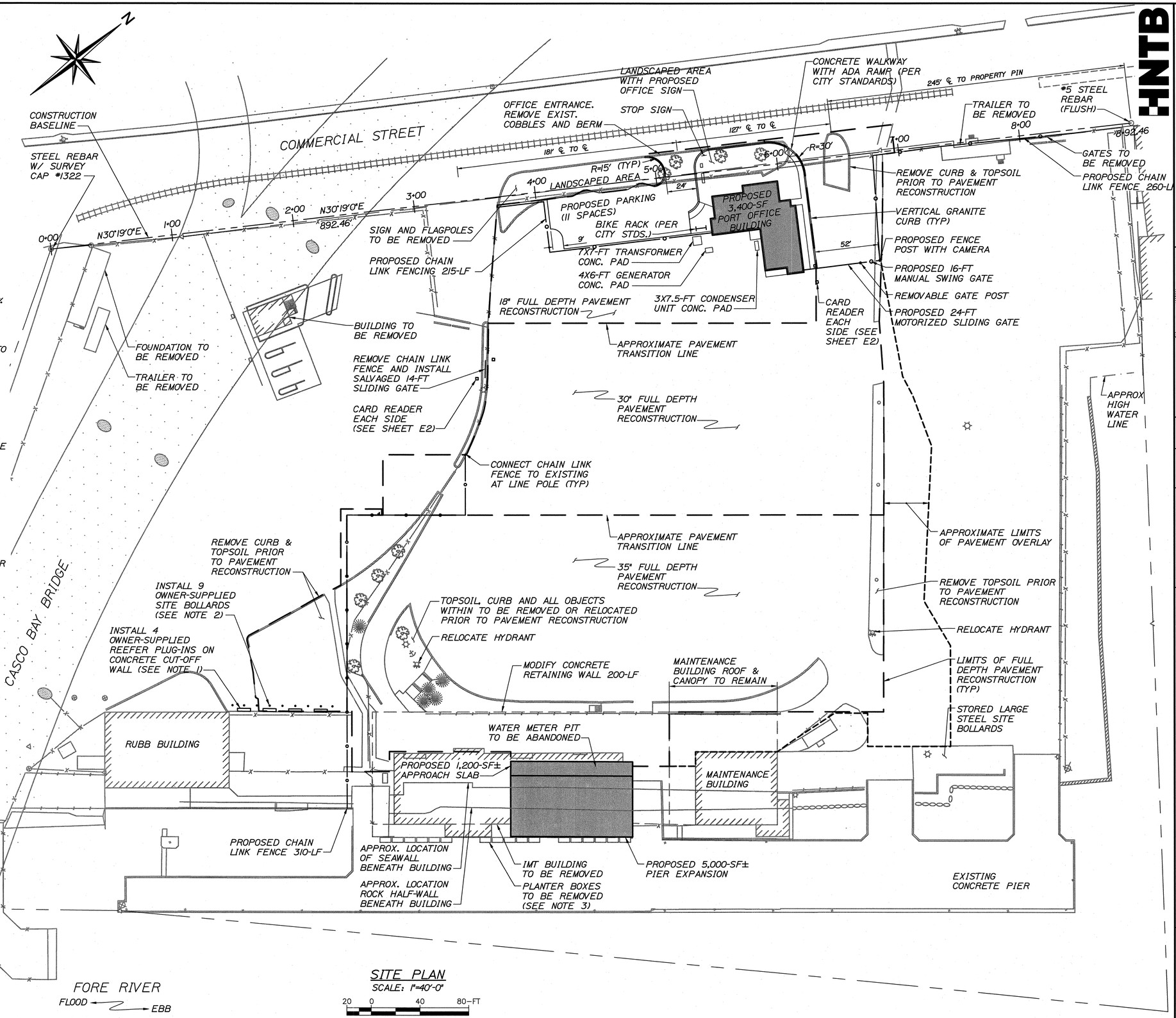

SITE PLAN
SCALE: 1"=40'-0"

HNTB

STATE OF MAINE
DEPARTMENT OF TRANSPORTATION

PROJECT NUMBER 017820.00

PIN 017820.00

STATE OF MAINE ROLAND A. LAVALLEE No. 6462 LICENSED PROFESSIONAL ENGINEER

SIGNATURE | P.E. NUMBER | DATE

PROJ. MANAGER CRAIG R. MORIN	BY	DATE
DESIGN-DETAILED	HME	3/25/11
CHECKED-REVIEWED	RAL	3/25/11
DESIGN2-DETAILED2	-	-
DESIGN3-DETAILED3	-	-
REVISIONS 1	-	-
REVISIONS 2	-	-
REVISIONS 3	-	-
REVISIONS 4	-	-
FIELD CHANGES	-	-

PORTLAND INTERNATIONAL MARINE TERMINAL IMPROVEMENTS
PORTLAND CUMBERLAND COUNTY

SITE PLAN

SHEET NUMBER
C16

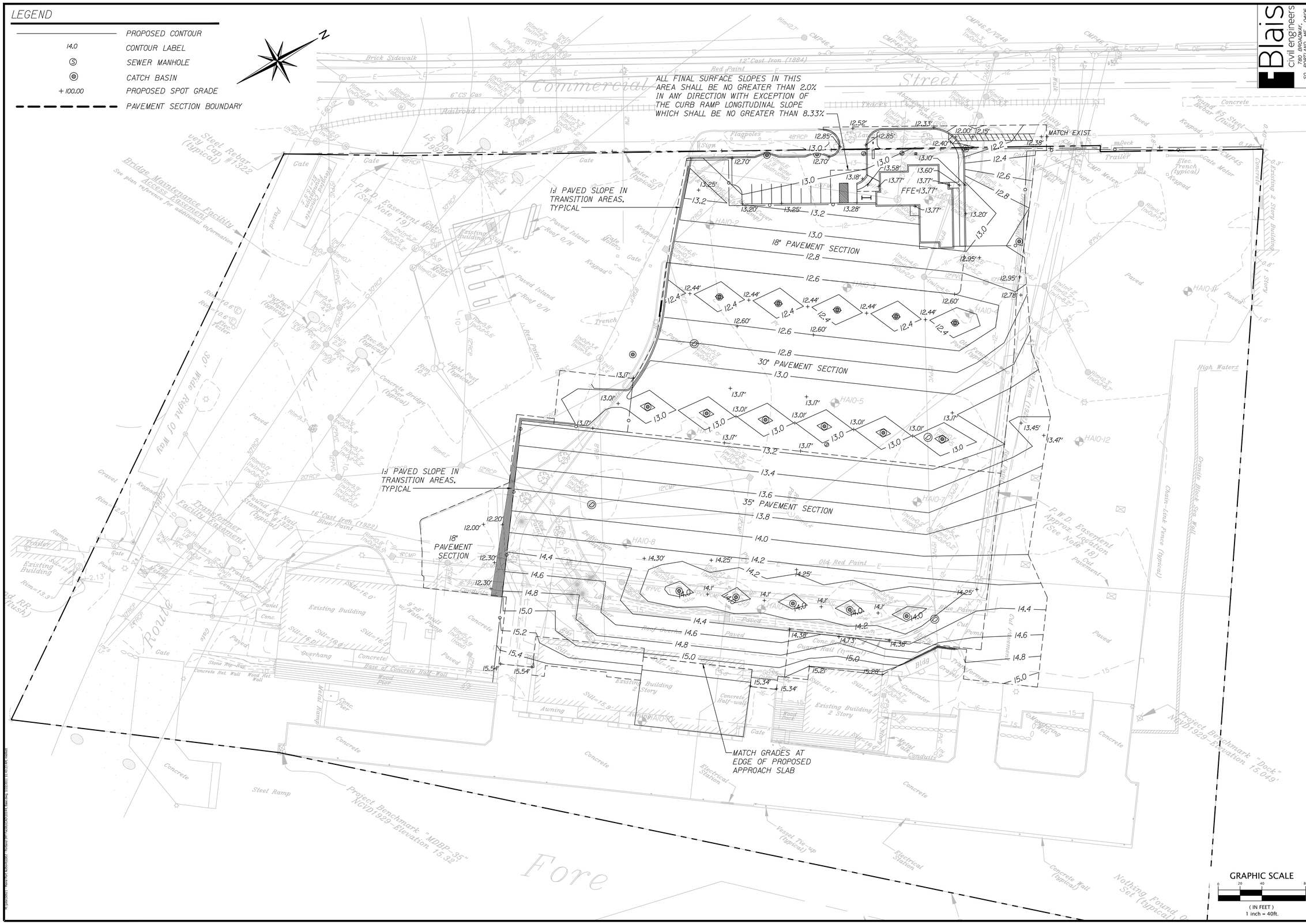

Blais civil engineers
780 BROADWAY, SO. PORTLAND, ME 04106
(207) 767-7300

STATE OF MAINE
DEPARTMENT OF TRANSPORTATION

PROJECT NUMBER 017820.00

PIN 017820.00

STATE OF MAINE
STEVE G. BLAIS
No. 10084
LICENSED PROFESSIONAL ENGINEER

		BY	DATE
PROJ. MANAGER	CRAIG R. MORIN		
DESIGN-DETAILED	JAV-SGB	-	3/25/11
CHECKED-REVIEWED	SGB	-	3/25/11
DESIGN2-DETAILED2	-	-	-
DESIGN3-DETAILED3	-	-	-
REVISIONS 1			
REVISIONS 2			
REVISIONS 3			
REVISIONS 4			
FIELD CHANGES			

SIGNATURE 10084
P.E. NUMBER 3/24/11
DATE

PORTLAND INTERNATIONAL
MARINE TERMINAL IMPROVEMENTS
PORTLAND CUMBERLAND COUNTY

SITE GRADING PLAN

SHEET NUMBER
C17

LEGEND

—W—	WATERLINE
—S—	GRAVITY SEWER PIPE
▬▬▬	STORM DRAIN PIPE
—G—	GAS LINE
Ⓢ	SEWER MANHOLE
◉	CATCH BASIN
▫	FIELD INLET
	GATE VALVE
+100.00	PROPOSED SPOT GRADE
	HYDRANT
TP	TEST PIT

DRAINAGE STRUCTURE SCHEDULE

STRUCTURE	TYPE	RIM	INV IN	INV OUT
CB-1	4'0 (NEW)	12.00	7.30 (P1.9)	MATCH EX (P1.8)
CB-1A	4'0 (NEW)	12.55	N/A	7.58 (P1.9)
CB-2	(EXIST)	10.10'	MATCH EX (P1.8)	MATCH EX (P1.7)
CB-3	4'0 (NEW)	12.25	6.90 (P1.13)	6.60 (P1.12)
CB-4	4'0 (NEW)	12.25	7.54 (P1.15)	7.45 (P1.13)
CB-5	4'0 (NEW)	12.25	N/A	7.82 (P1.15)
CB-6	4'0 (NEW)	12.75	7.00 (P1.16)	6.90 (P1.11)
CB-7	4'0 (NEW)	12.75	N/A	7.55 (P1.16)
CB-8	4'0 (NEW)	13.85	7.80 (P1.4)	7.61 (P1.3)
CB-9	4'0 (NEW)	13.85	8.60 (P1.5)	8.35 (P1.4)
CB-10	4'0 (NEW)	13.85	N/A	9.15 (P1.5)
DMH-1	6'0 (NEW)	12.80	MATCH EX (P1.7) 5.90 (P1.10) 6.10 (P1.12) 6.90 (P1.18)	MATCH EX (P1.6)
CB-19	4'0 (NEW)	12.75	6.45 (P1.11) 8.55 (P1.17)	6.35 (P1.10)
CB-20	4'0 (NEW)	12.75	N/A	8.75 (P1.17)
CB-21	4'0 (NEW)	10.40	N/A	7.40 (P1.18)
DMH-2	(EXIST)	13.85	6.46 (P1.3)	MATCH EX (P1.2)
CB-11	4'0 (NEW)	11.95	MATCH EX (P2.10) MATCH EX (P2.10A) 8.60 (P2.16)	MATCH EX (P2.6)
CB-12	4'0 (NEW)	12.75	4.20 (P2.6)	3.98 (P2.5)
CB-13	6'0 (NEW)	12.25	3.50 (P2.5) 6.35 (P2.7) 8.00 (P2.14)	3.30 (P2.4)
CB-13A	(EXIST)	12.20	MATCH EX (P2.8) MATCH EX (P2.9)	7.10+/- (P2.7)
CB-14	4'0 (NEW)	12.25	N/A	8.50 (P2.14)
DMH-3	4'0 (NEW)	12.75	8.50 (P2.13) 8.80 (P2.15) MATCH EX (P2.4)	MATCH EX (P2.4)
CB-15	4'0 (NEW)	12.75	N/A	9.00 (P2.15)
CB-16	4'0 (NEW)	12.75	N/A	9.00 (P2.13)
DMH-4	(EXIST)	13.75	MATCH EX (P2.3)	MATCH EX (P2.2)
DMH-5	4'0 (NEW)	13.85	MATCH EX (P2.2) 9.10 (P2.11)	MATCH EX (P2.1)
CB-17	4'0 (NEW)	13.85	9.50 (P2.12)	9.40 (P2.11)
CB-18	4'0 (NEW)	13.85	N/A	10.00 (P2.12)
F1-1	2' SQ. (NEW)	12.00	N/A	9.00 (P2.16)

DRAINAGE PIPE SCHEDULE

SYSTEM NO. 1

PIPE #	NEW/EXIST	SIZE/TYPE	LENGTH (LF)	SLOPE
P1.1	EXIST	20" EXIST	109'	0.003
P1.2	EXIST	12" EXIST	120'	0.003
P1.3	NEW	12" PVC	105'	0.010
P1.4	NEW	12" PVC	46'	0.010
P1.5	NEW	12" PVC	46'	0.010
P1.6	EXIST	15" EXIST	236'	0.002
P1.7	EXIST	12" EXIST	86'	0.002
P1.8	EXIST	10" EXIST	122'	0.002
P1.9	NEW	12" PVC	40'	0.005
P1.10	NEW	12" PVC	58'	0.008
P1.11	NEW	12" PVC	48'	0.010
P1.12	NEW	12" PVC	42'	0.010
P1.13	NEW	12" PVC	48'	0.010
P1.14	EXIST	12" EXIST	132'	0.002
P1.15	NEW	12" PVC	48'	0.005
P1.16	NEW	12" PVC	48'	0.010
P1.17	NEW	12" PVC	48'	0.010
P1.18	NEW	12" PVC	51'	0.010

SYSTEM NO. 2

PIPE #	NEW/EXIST	SIZE/TYPE	LENGTH (LF)	SLOPE
P2.1	EXIST	15" EXIST	122'	0.006
P2.2	EXIST	15" EXIST	90'	0.010
P2.3	EXIST	15" EXIST	81'	0.021
P2.4	NEW	15" PVC	101'	0.010
P2.5	NEW	15" PVC	89'	TBD
P2.6	NEW	15" PVC	92'	TBD
P2.7	NEW	12" PVC	83'	0.010
P2.8	EXIST	8" EXIST	84'	0.006
P2.9	EXIST	8" EXIST	112'	0.004
P2.10	EXIST	16" EXIST HDPE	40'	-0.004
P2.10A	NEW	12" PVC	30'	
P2.11	NEW	12" PVC	20'	0.012
P2.12	NEW	12" PVC	46'	0.010
P2.13	NEW	12" PVC	34'	0.013
P2.14	NEW	12" PVC	48'	0.010
P2.15	NEW	12" PVC	6'	0.013
P2.16	NEW	12" PVC	42'	0.010

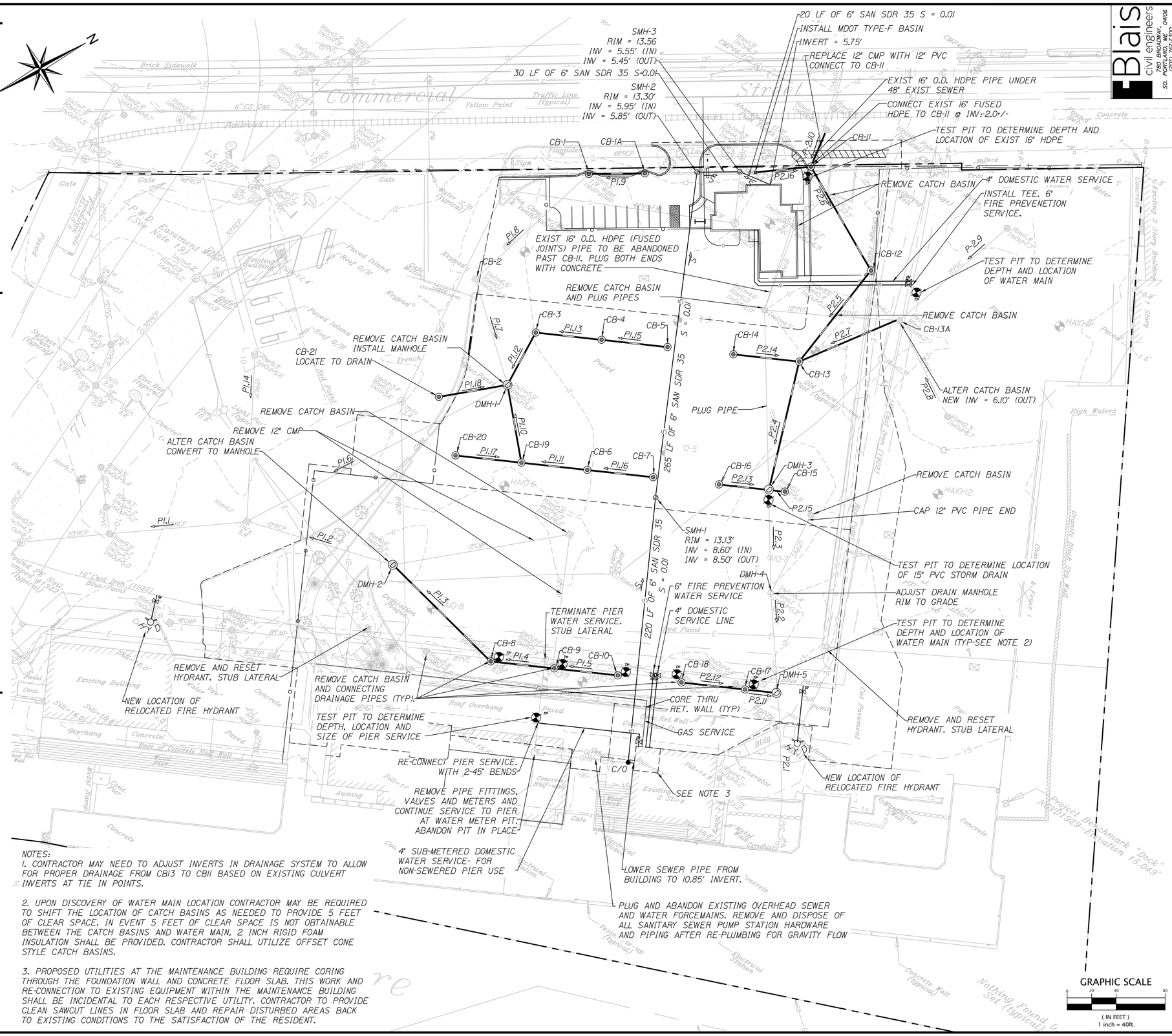

NOTES:

1. CONTRACTOR MAY NEED TO ADJUST INVERTS IN DRAINAGE SYSTEM TO ALLOW FOR PROPER DRAINAGE FROM CBI3 TO CBII BASED ON EXISTING CULVERT INVERTS AT TIE IN POINTS.

2. UPON DISCOVERY OF WATER MAIN LOCATION CONTRACTOR MAY BE REQUIRED TO SHIFT THE LOCATION OF CATCH BASINS AS NEEDED TO PROVIDE 5 FEET OF CLEAR SPACE. IN EVENT 5 FEET OF CLEAR SPACE IS NOT OBTAINABLE BETWEEN THE CATCH BASINS AND WATER MAIN, 2 INCH RIGID FOAM INSULATION SHALL BE PROVIDED. CONTRACTOR SHALL UTILIZE OFFSET CONE STYLE CATCH BASINS.

3. PROPOSED UTILITIES AT THE MAINTENANCE BUILDING REQUIRE CORING THROUGH THE FOUNDATION WALL AND CONCRETE FLOOR SLAB. THIS WORK AND RE-CONNECTION TO EXISTING EQUIPMENT WITHIN THE MAINTENANCE BUILDING SHALL BE INCIDENTAL TO EACH RESPECTIVE UTILITY. CONTRACTOR TO PROVIDE CLEAN SAWCUT LINES IN FLOOR SLAB AND REPAIR DISTURBED AREAS BACK TO EXISTING CONDITIONS TO THE SATISFACTION OF THE RESIDENT.

Blais civil engineers
780 BROADWAY
SO. PORTLAND, ME 04106
(207) 767-7300

STATE OF MAINE
DEPARTMENT OF TRANSPORTATION

PROJECT NUMBER 017820.00

PIN 017820.00

PROJ. MANAGER	CRAIG R. MORIN		
DESIGN-DETAILED	JAV-SGB	3/25/11	
CHECKED-REVIEWED	SGB	3/25/11	SIGNATURE
DESIGN-DETAILED2	-	-	
DESIGN-DETAILED3	-	-	P.E. NUMBER
REVISIONS 1	REVISED PER CITY COMMENTS	02/09/11	
REVISIONS 2	REVISED PER CITY COMMENTS	02/11/11	
REVISIONS 3			
REVISIONS 4			
FIELD CHANGES			DATE

PORTLAND INTERNATIONAL
MARINE TERMINAL IMPROVEMENTS
PORTLAND CUMBERLAND COUNTY

SITE UTILITY PLAN

SHEET NUMBER
C18

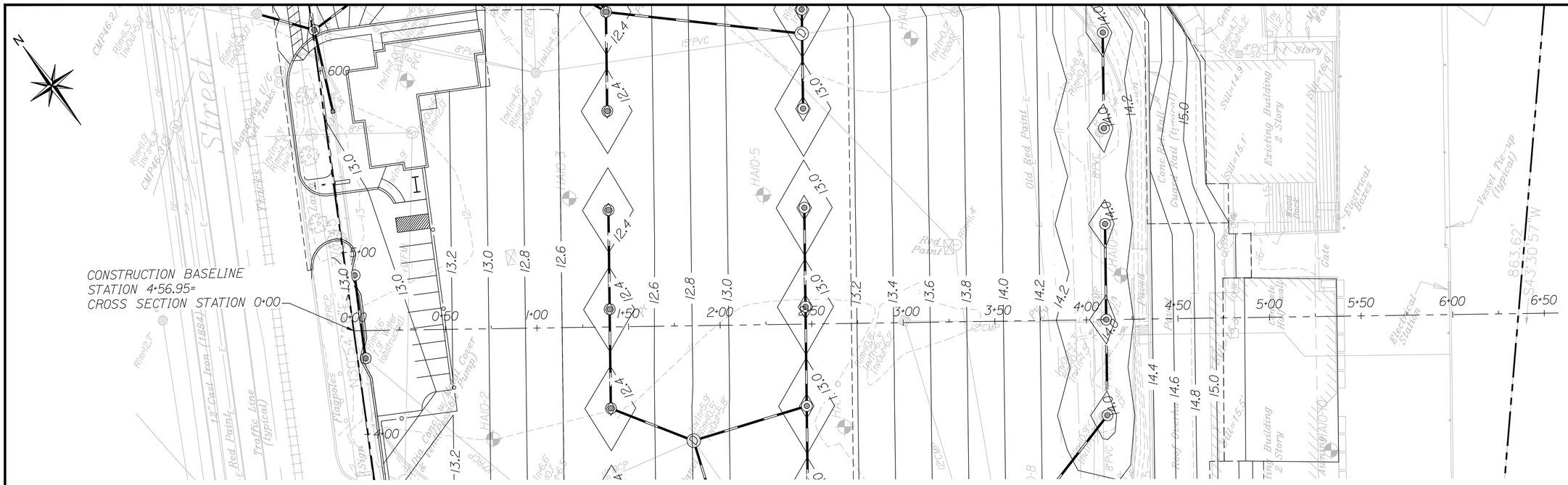

PLAN VIEW
1"=30'-0"

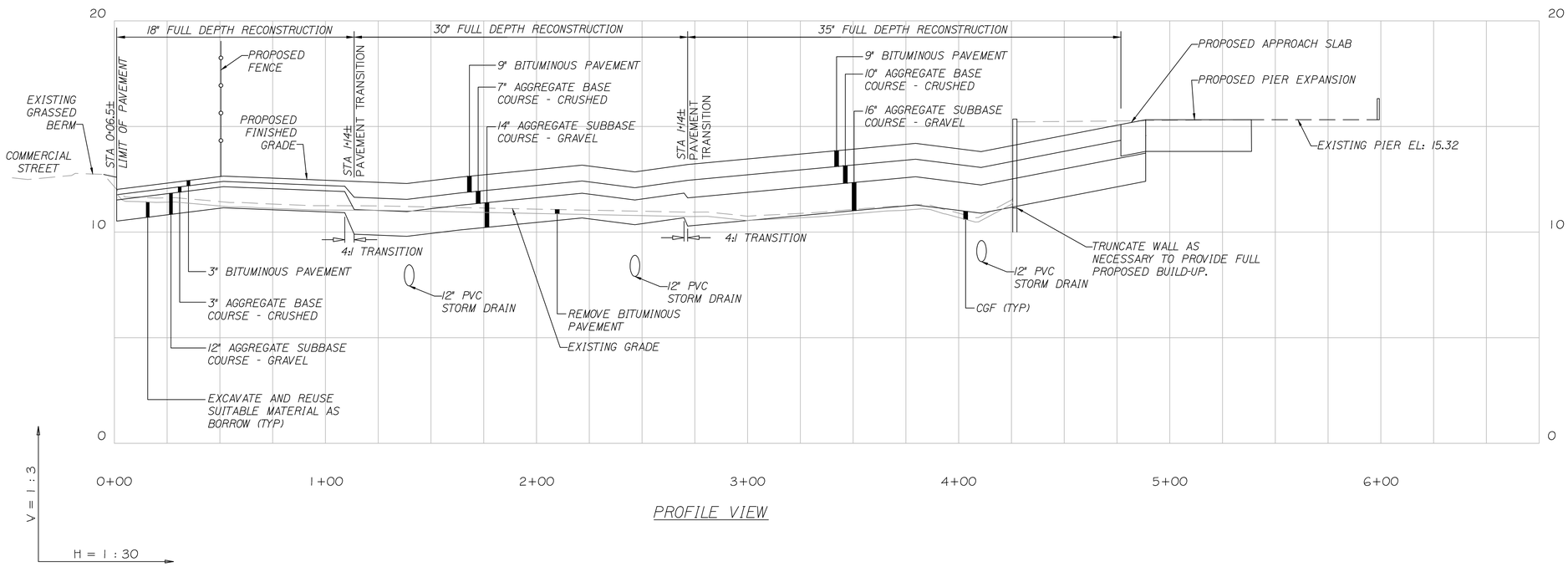

PROFILE VIEW

GRAPHIC SCALE
0 15 30 60
(IN FEET)
1 inch = 30ft.

Blais civil engineers
780 BROADWAY
SO. PORTLAND, ME 04106
(207) 767-7300

STATE OF MAINE
DEPARTMENT OF TRANSPORTATION

PROJECT NUMBER 017820.00

PIN 017820.00

PROJ. MANAGER	CRAIG R. MORIN	BY
DESIGN-DETAILED	JAV-SGB	-
CHECKED-REVIEWED	SGB	-
DESIGN2-DETAILED2	-	-
DESIGN3-DETAILED3	-	-
REVISIONS 1		
REVISIONS 2		
REVISIONS 3		
REVISIONS 4		
FIELD CHANGES		

	DATE
	3/25/11
SIGNATURE	3/25/11
P.E. NUMBER	-
DATE	-

PORTLAND INTERNATIONAL
MARINE TERMINAL IMPROVEMENTS
PORTLAND CUMBERLAND COUNTY

CONCEPTUAL CROSS SECTION

SHEET NUMBER
C19

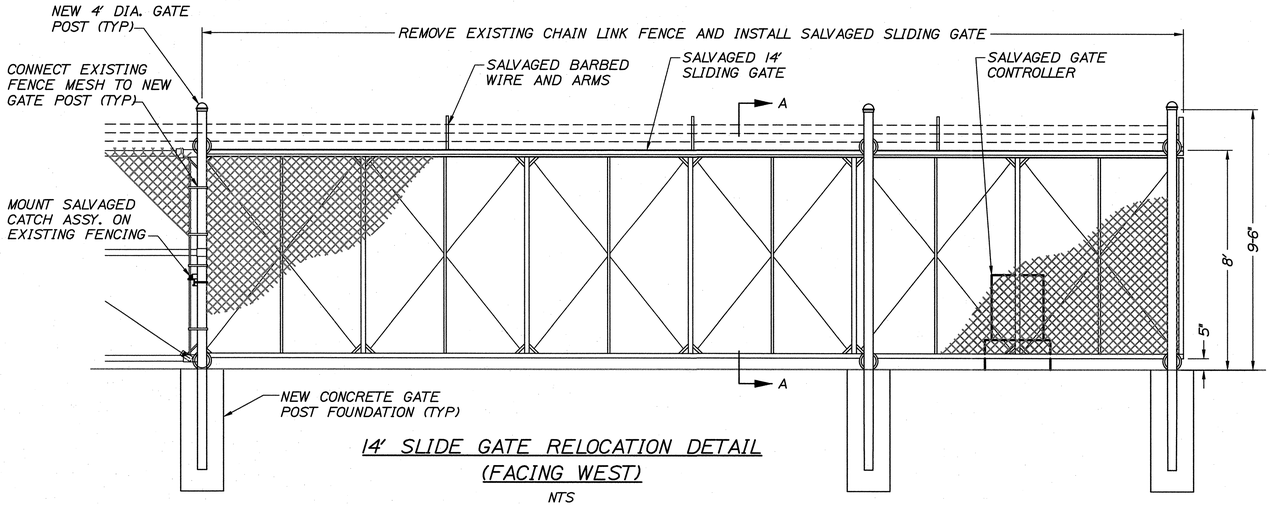

14' SLIDE GATE RELOCATION DETAIL (FACING WEST)

NTS

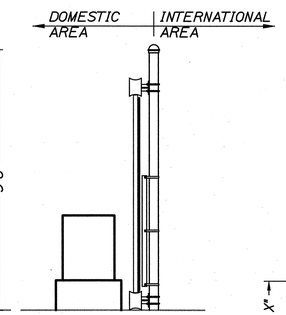

SECTION A-A (FACING NORTH)

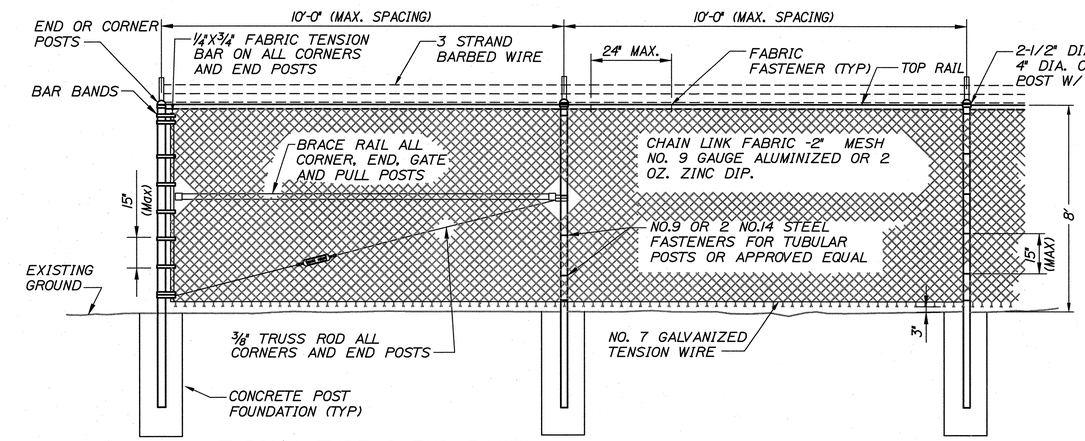

TYPICAL TYPE I END PANEL

TYPICAL INTERMEDIATE PANEL

TYPICAL CHAIN LINK FENCE

NTS

NOTES:

1. TYPE I BRACING WILL BE USED AT CORNER AND END POSTS.
2. CONCRETE FOR POST FOUNDATIONS SHALL BE CLASS "A".
3. ALL POSTS SHALL BE SET IN CONCRETE.
4. CHAIN LINK FENCE SHALL BE INSTALLED WITH BARBS DOWN.
5. ALL COMPONENTS OF CHAIN LINK FENCE SHALL BE HDG STEEL IN ACCORDANCE WITH AASHTO M181.
6. FASTEN STEEL FABRIC FROM EXISTING FENCE TO NEW POST WHERE REQUIRED.

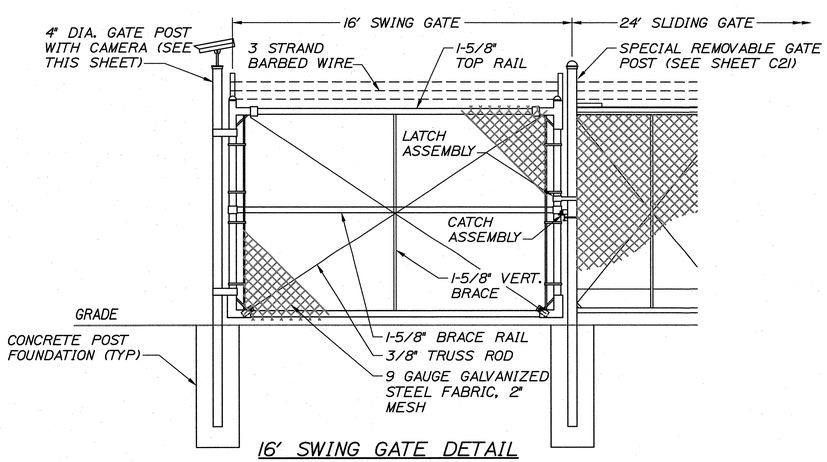

16' SWING GATE DETAIL (FACING SOUTH)

NTS

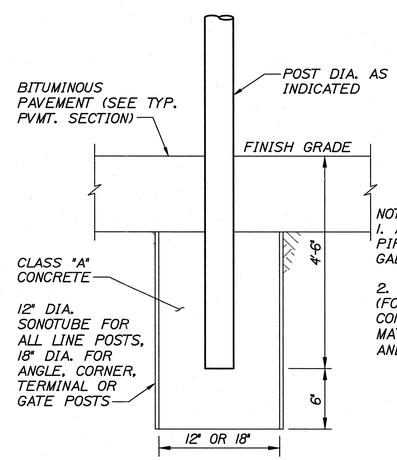

NOTES:

1. ALL POSTS ARE NOMINAL PIPE SIZE, SCHEDULE 40, GALVANIZED STEEL.
2. PATCH ALL PAVEMENT (FOLLOWING CURING OF CONCRETE BASES) TO MATCH EXISTING MATERIAL AND THICKNESS

FENCE/GATE POST DETAIL

NTS

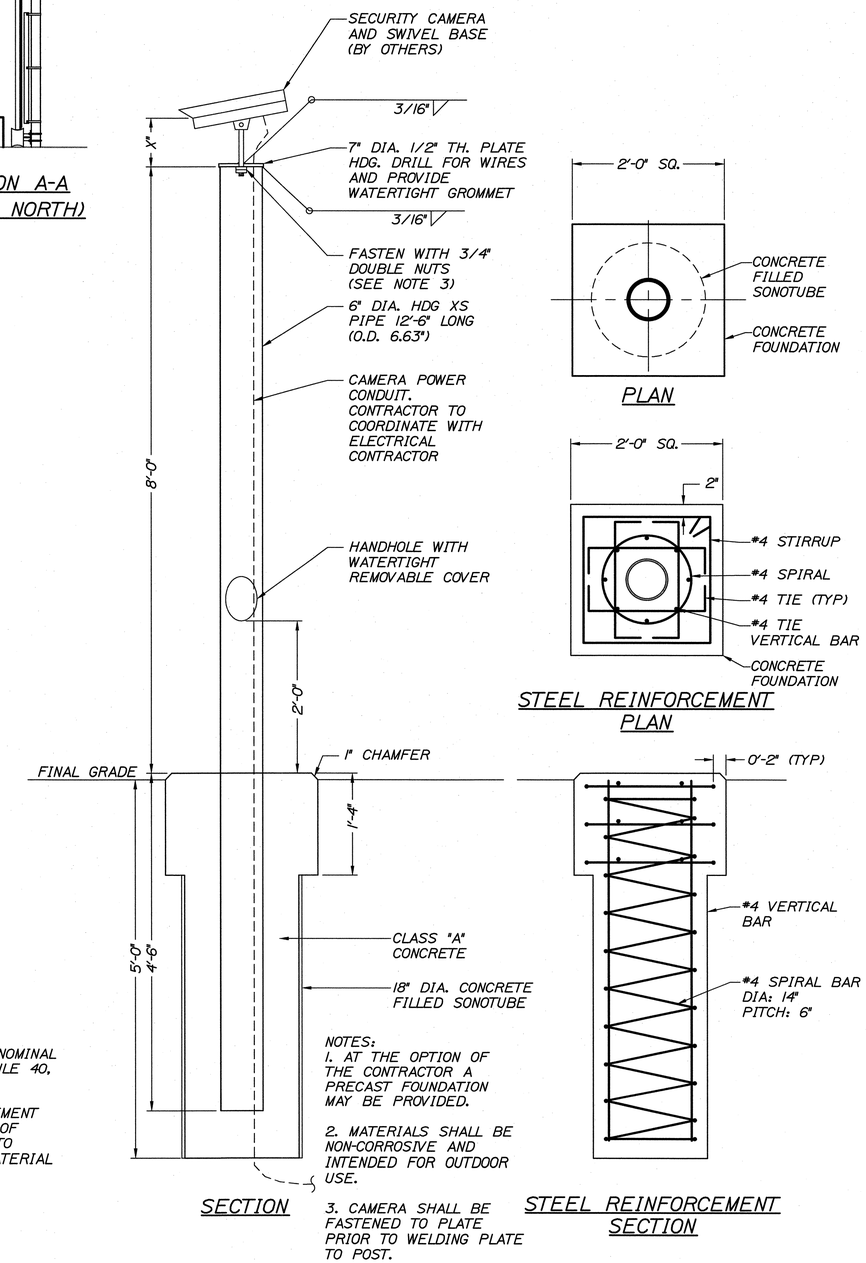

PLAN

STEEL REINFORCEMENT PLAN

SECTION

STEEL REINFORCEMENT SECTION

NOTES:

1. AT THE OPTION OF THE CONTRACTOR A PRECAST FOUNDATION MAY BE PROVIDED.
2. MATERIALS SHALL BE NON-CORROSIVE AND INTENDED FOR OUTDOOR USE.
3. CAMERA SHALL BE FASTENED TO PLATE PRIOR TO WELDING PLATE TO POST.

SPECIAL SECURITY GATE POST WITH CAMERA DETAIL

SCALE: 1"=1'-0"

HNTB

STATE OF MAINE
DEPARTMENT OF TRANSPORTATION

PROJECT NUMBER 017820.00

PIN 017820.00

STATE OF MAINE — ROLAND A. LAVALLEE No. 6452 — LICENSED PROFESSIONAL ENGINEER

SIGNATURE			
P.E. NUMBER			
DATE			
PROJ. MANAGER	CRAIG R. MORIN	BY	DATE
DESIGN-DETAILED	HME	HME	3/25/11
CHECKED-REVIEWED	DOE	RAL	3/25/11
DESIGN2-DETAILED2	-	-	-
DESIGN3-DETAILED3	-	-	-
REVISIONS 1	-	-	-
REVISIONS 2	-	-	-
REVISIONS 3	-	-	-
REVISIONS 4	-	-	-
FIELD CHANGES	-	-	-

PORTLAND INTERNATIONAL MARINE TERMINAL IMPROVEMENTS
PORTLAND — CUMBERLAND COUNTY

FENCING DETAILS I

SHEET NUMBER

C20

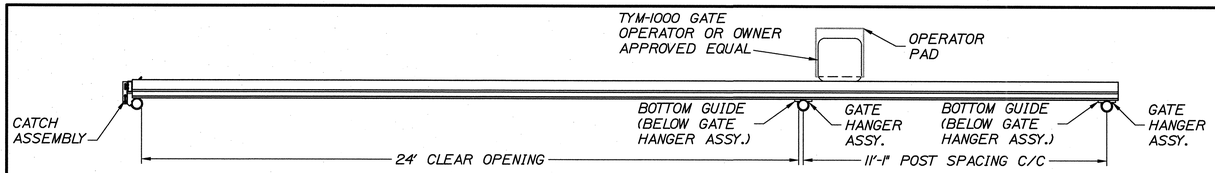

PLAN

NOTE:
THE MAXIMUM ALLOWABLE GAP BETWEEN THE CORNER OF THE OFFICE BUILDING AND CHAIN LINK FENCING AND GATE SHALL NOT EXCEED 3-INCHES

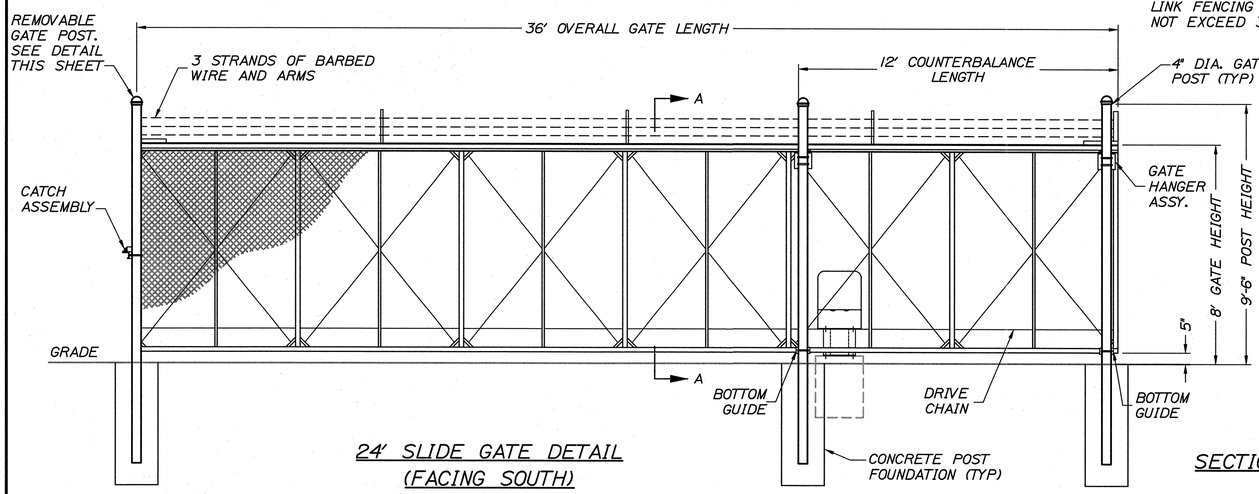

24' SLIDE GATE DETAIL
(FACING SOUTH)
NTS

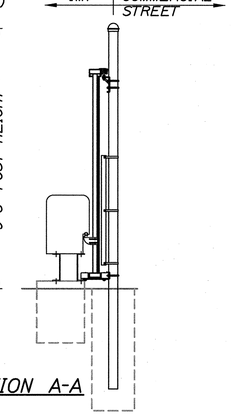

SECTION A-A

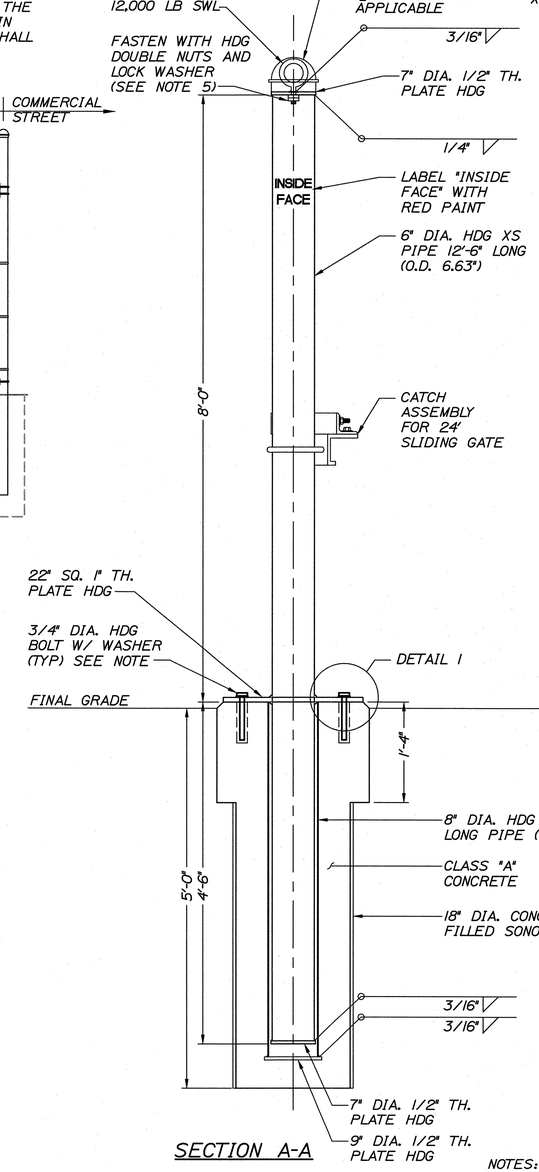

SECTION A-A

SPECIAL REMOVABLE GATE POST DETAIL
SCALE: 1"=1'-0"

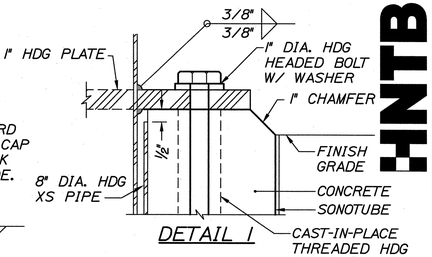

DETAIL 1

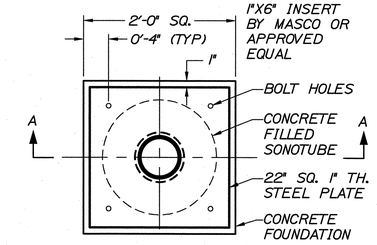

PLAN

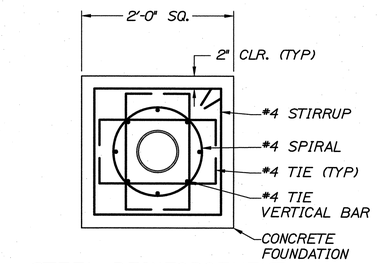

STEEL REINFORCEMENT PLAN

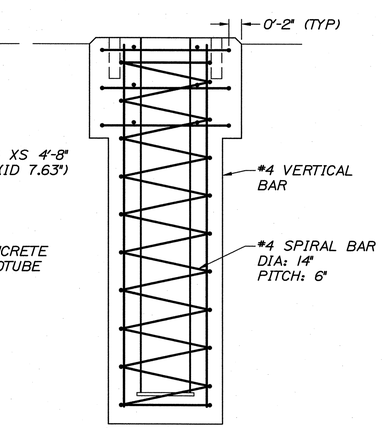

STEEL REINFORCEMENT SECTION

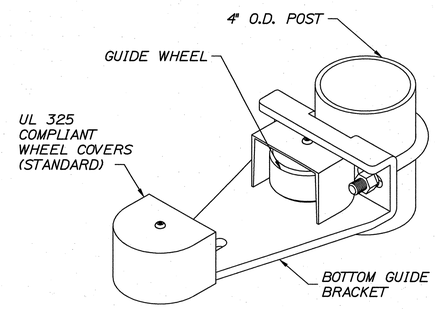

BOTTOM GUIDE DETAIL
NTS

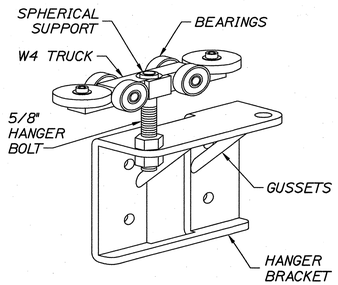

GATE HANGER ASSEMBLY DETAIL
NTS

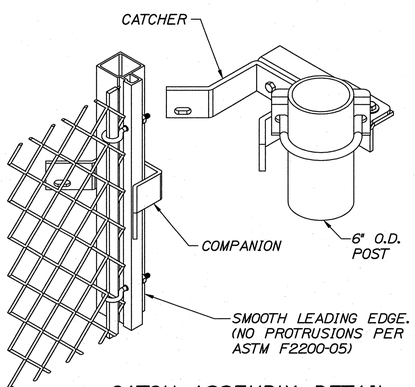

CATCH ASSEMBLY DETAIL
NTS

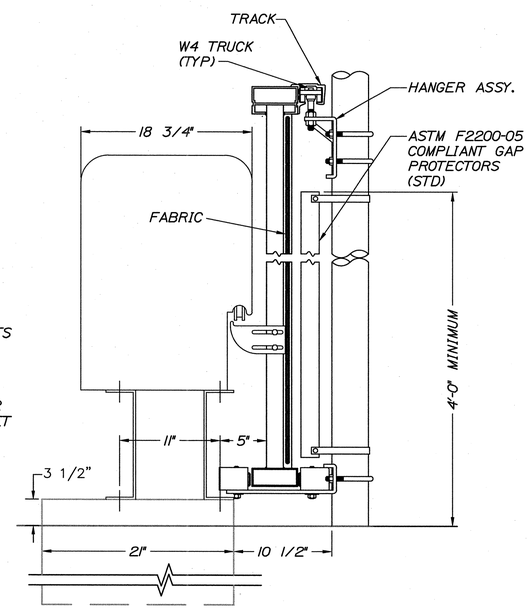

ENLARGED SECTION
NTS

NOTES:
1. PLATES SHALL CONFORM TO ASTM A36.

2. AT THE OPTION OF THE CONTRACTOR A STEEL REINFORCED PRECAST CONCRETE FOUNDATION MAY BE PROVIDED.

3. MATERIALS SHALL BE NON-CORROSIVE AND INTENDED FOR OUTDOOR USE.

4. ANTI-SEIZE LUBRICATING COMPOUND SHALL BE PROVIDED ON ALL BOLTS PRIOR TO POST INSTALLATION.

5. EYEBOLT SHALL BE FASTENED TO PLATE PRIOR TO WELDING PLATE TO POST.

HNTB

STATE OF MAINE
DEPARTMENT OF TRANSPORTATION

PROJECT NUMBER 017820.00

PIN 17820.00

STATE OF MAINE ROLAND A. LAVALLEE No. 6452 LICENSED PROFESSIONAL ENGINEER

SIGNATURE — P.E. NUMBER — DATE

PROJ. MANAGER	CRAIG R. MORIN		
DESIGN-DETAILED	HME	HME	3/25/11
CHECKED-REVIEWED	DGE	RAL	3/25/11
DESIGN2-DETAILED2	-	-	-
DESIGN3-DETAILED3	-	-	-
REVISIONS 1	-	-	-
REVISIONS 2	-	-	-
REVISIONS 3	-	-	-
REVISIONS 4	-	-	-
FIELD CHANGES	-	-	-

PORTLAND INTERNATIONAL MARINE TERMINAL IMPROVEMENTS
PORTLAND — CUMBERLAND COUNTY

FENCING DETAILS II

SHEET NUMBER
C21

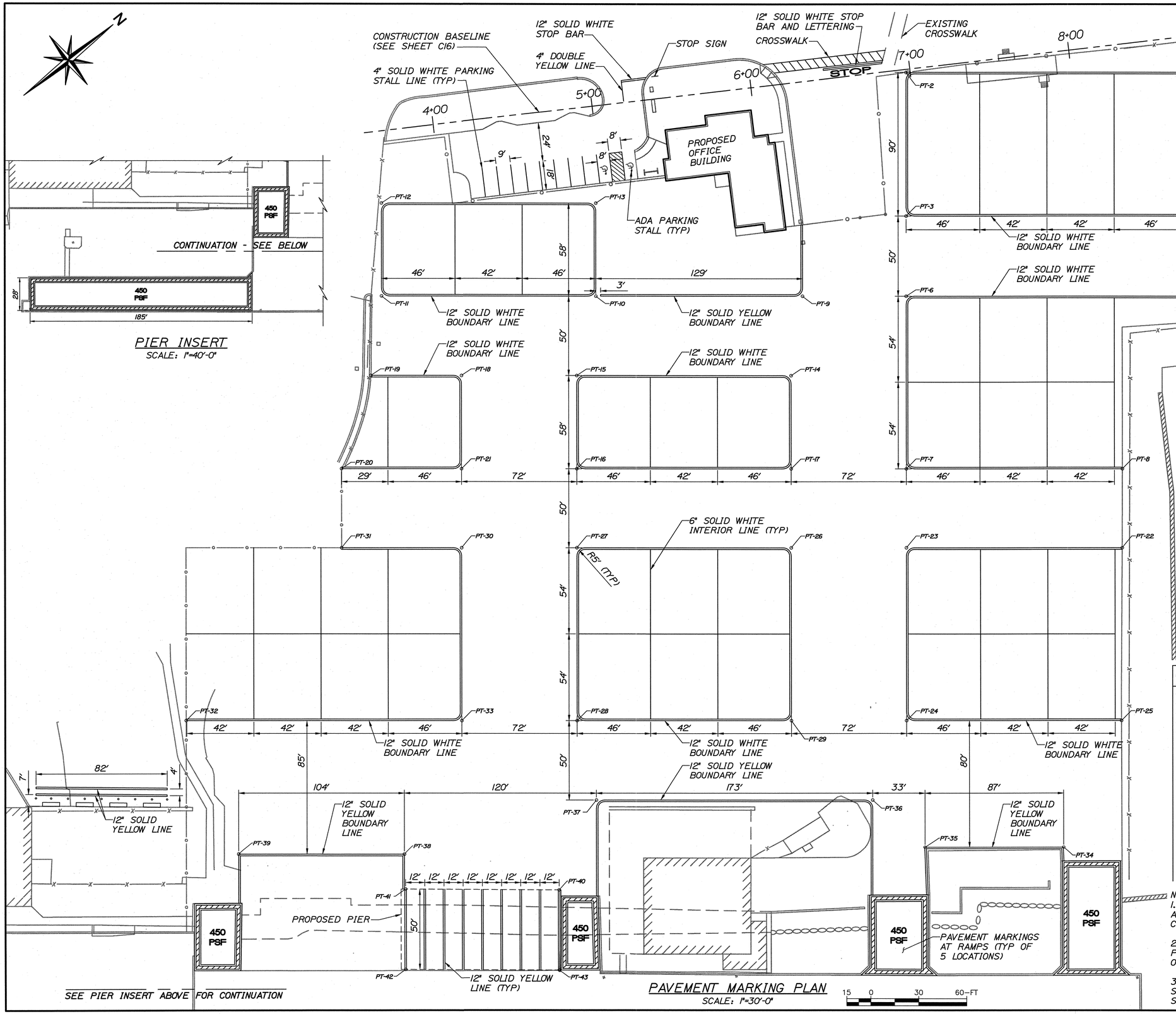

PIER INSERT
SCALE: 1"=40'-0"

PAVEMENT MARKING PLAN
SCALE: 1"=30'-0"

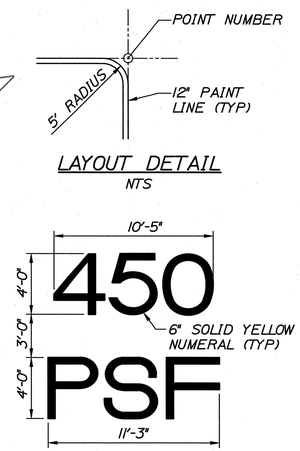

LAYOUT DETAIL
NTS

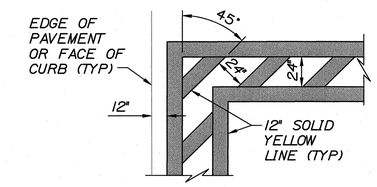

NOTE:
LETTERS AND NUMERALS SHALL BE APPLIED WITH USE OF STENCILS. STENCILS SHALL BE APPROVED BY THE RESIDENT PRIOR TO USE.

PAVEMENT MARKINGS AT RAMPS
NTS

POINT LAYOUT

LOCATION	STATION	OFFSET	LOCATION	STATION	OFFSET
PT-1	8+72.2	22.5'	PT-23	6+62.6	297.8'
PT-2	6+97.4	1.93'	PT-24	6+49.9	405.0'
PT-3	6+86.9	91.2'	PT-25	7+83.3	420.7'
PT-4	8+61.7	111.78'	PT-26	5+91.1	289.4'
PT-5	8+66.9	162.7'	PT-27	4+58.0	273.7'
PT-6	6+81.0	140.9'	PT-28	4+45.3	381.0'
PT-7	6+68.4	248.1'	PT-29	5+78.4	396.6'
PT-8	8+02.4	263.9'	PT-30	3+86.5	265.3'
PT-9	6+16.7	133.3'	PT-31	3+11.9	256.5'
PT-10	4+88.4	118.2'	PT-32	2+02.7	352.4'
PT-11	3+55.3	102.5'	PT-33	3+73.8	372.5'
PT-12	3+62.1	44.9'	PT-34	7+37.9	495.9'
PT-13	4+95.2	60.6'	PT-35	6+51.9	485.8'
PT-14	6+03.7	182.1'	PT-36	6+23.0	452.2'
PT-15	4+70.6	166.4'	PT-37	4+51.4	432.0'
PT-16	4+63.8	224.0'	PT-38	3+28.1	452.3'
PT-17	5+96.9	239.7'	PT-39	2+25.3	440.2'
PT-18	3+99.1	158.0'	PT-40	4+21.6	485.7'
PT-19	3+42.8	151.4'	PT-41	3+26.3	474.0'
PT-20	3+17.8	206.8'	PT-42	3+20.5	523.7'
PT-21	3+02.3	215.5'	PT-43	4+15.8	535.4'

NOTES:
1. ALL PAVEMENT STRIPING AND SIGNING SHALL BE IN ACCORDANCE WITH THE "MANUAL OF UNIFORM TRAFFIC CONTROL DEVICES", U.S.D.O.T., F.H.W.A., 2009 EDITION.

2. PAVEMENT MARKINGS WITHIN OFFICE BUILDING PARKING LOT, DRIVEWAYS, AND CROSSWALK ARE PART OF THE BASE BID.

3. PAVEMENT MARKINGS WITHIN THE CONTAINER STORAGE AREA, CONCRETE RAMPS, AND REEFER AREA SHALL BE PART OF BID ALTERNATE NO. 3.

HNTB

STATE OF MAINE
DEPARTMENT OF TRANSPORTATION

PROJECT NUMBER 017820.00

PIN 017820.00

STATE OF MAINE — ROLAND A. LAVALLEE No. 6462 — LICENSED PROFESSIONAL ENGINEER

SIGNATURE — P.E. NUMBER — DATE

		BY	DATE
PROJ. MANAGER	CRAIG R. MORIN		
DESIGN-DETAILED	CRM	HME	3/25/11
CHECKED-REVIEWED	RBM	RAL	3/25/11
DESIGN2-DETAILED2	-	-	-
DESIGN3-DETAILED3	-	-	-
REVISIONS 1	-	-	-
REVISIONS 2	-	-	-
REVISIONS 3	-	-	-
REVISIONS 4	-	-	-
FIELD CHANGES	-	-	-

PORTLAND INTERNATIONAL MARINE TERMINAL IMPROVEMENTS
PORTLAND — CUMBERLAND COUNTY

PAVEMENT MARKING PLAN

SHEET NUMBER
C22

LEGEND

- BOXWOOD SHRUB
- PLANTING BED
- GRASSED AREA

CONTROL POINTS FOR CURB		
LOCATION	STATION	OFFSET
PT-1	6+22.3	88.85'-RT
PT-2	6+21.7	10.63'-RT
PT-3	5+91.6	19.15'-LT
PT-4	5+46.9	19.0'-LT
PT-5	5+31.9	3.95'-LT
PT-6	5+32.0	22.88'-RT
PT-7	5+23.1	30.49'-RT
PT-8	3+68.1	6.96-RT
PT-9	4+97.9	6.34'-RT
PT-10	5+07.9	4.32'-LT
PT-11	4+92.8	18.81'-LT

CONTROL POINTS FOR OFFICE		
LOCATION	STATION	OFFSET
PT-A	6+11.3	90.66'-RT
PT-B	6+10.9	35.69'-RT
PT-C	5+98.4	13.93'-RT
PT-D	5+69.3	14.14'-RT
PT-E	5+43.7	20.07'-RT
PT-F	5+40.3	51.86'-RT
PT-G	5+79.6	51.58'-RT
PT-H	5+79.9	85.76'-RT

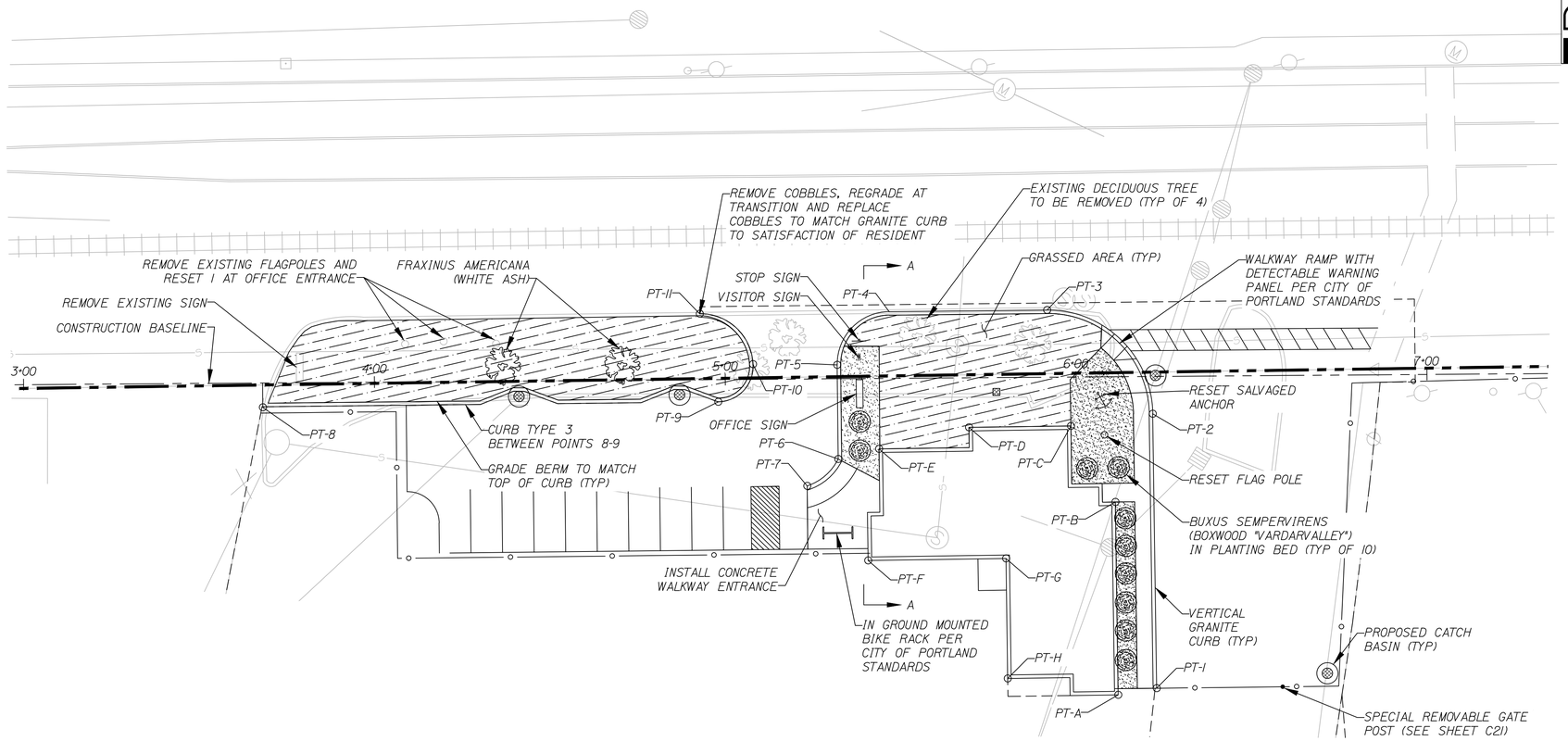

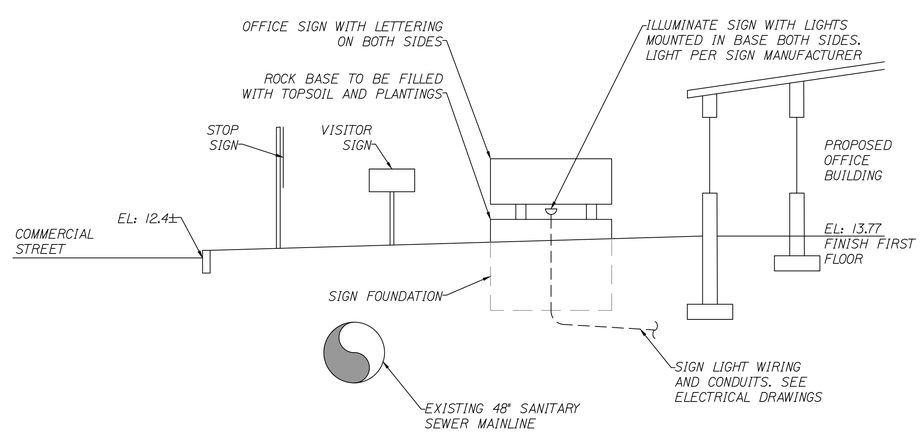

SECTION A-A
SCALE: 1"=5'

GRAPHIC SCALE
0 10 20 40
(IN FEET)
1 inch = 20ft.

Blais civil engineers
780 BROADWAY
SO. PORTLAND, ME 04106
(207) 767-7300

STATE OF MAINE
DEPARTMENT OF TRANSPORTATION

PROJECT NUMBER 017820.00

PIN 017820.00

STATE OF MAINE STEVE G. BLAIS No. 10684 LICENSED PROFESSIONAL ENGINEER

		BY	DATE
PROJ. MANAGER	CRAIG R. MORIN		
DESIGN-DETAILED	JAV-SGB	-	3/25/11
CHECKED-REVIEWED	SGB	-	3/25/11
DESIGN-DETAILED2	-	-	-
DESIGN-DETAILED3	-	-	-
REVISIONS 1			
REVISIONS 2			
REVISIONS 3			
REVISIONS 4			
FIELD CHANGES			

SIGNATURE
P.E. NUMBER
DATE
3/24/11

PORTLAND INTERNATIONAL MARINE TERMINAL IMPROVEMENTS
PORTLAND CUMBERLAND COUNTY

LANDSCAPING PLAN

SHEET NUMBER
C23

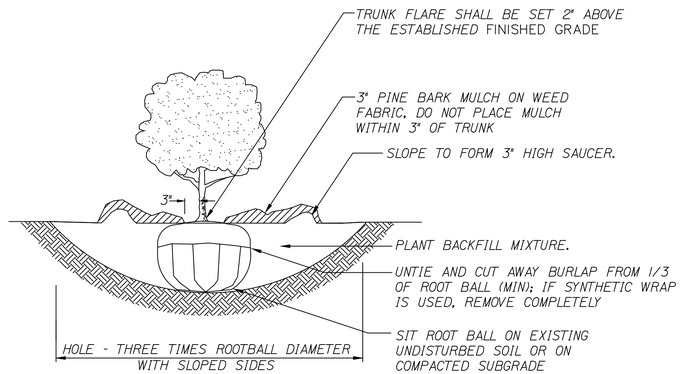

1 SHRUB PLANTING
NOT TO SCALE

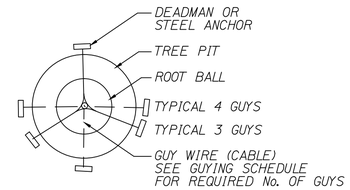

Plan

Notes:

1. USE GUYING SCHEDULE BELOW FOR DECIDUOUS AND EVERGREEN TREES OVER 4" CALIPER.

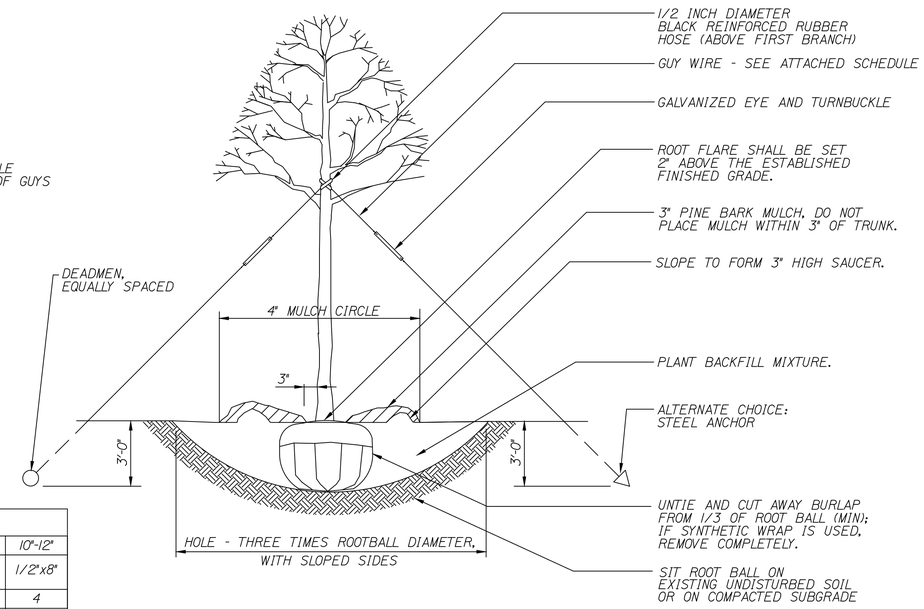

Guying Schedule				
TREE CALIPER	4"-6"	6"-8"	8"-10"	10"-12"
TURNBUCKLE (GALVANIZED)	5/16"x 4-1/2"	5/16"x 4-1/2"	3/8"x6"	1/2"x8"
# GUYS REQ'D.	3	3	4	4
WIRE OR CABLE	1/8"DIA.	3/16"DIA.	1/4"DIA.	5/16"DIA.
DEADMEN SIZE	4" DIA.	6" DIA.	8" DIA.	10" DIA.
DEADMAN LENGTH	24"	24"	36"	48"

2 DECIDOUS PLANTING (4" CALIPER AND GREATER)
NOT TO SCALE

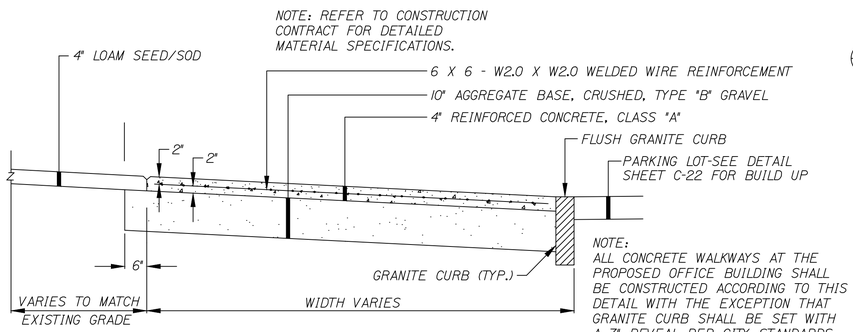

3 CONCRETE ENTRANCE SECTION
NOT TO SCALE

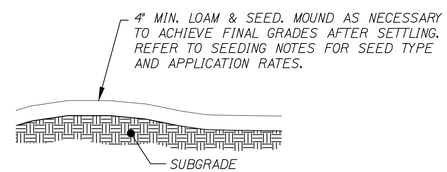

6 LOAM AND SEED DETAIL
NOT TO SCALE

SIZE OF SIGN		TEXT	TEXT DIMENSIONS (INCHES)			NUMBER OF SIGNS REQUIRED	COLOR		BORDER RADIUS	AREA IN SQUARE FEET	NOTES
WIDTH	HEIGHT		LETTER HEIGHT	VERTICAL SPACING	ARROW RTE. MKR.		BACK-GROUND	LEGEND BORDER			
48"	24"	TRUCK ENTRANCE	TEXT DIMENSIONS SHALL CONFORM TO "STANDARD HIGHWAY SIGNS" - 2000			4	SHALL CONFORM TO "STANDARD HIGHWAY SIGNS"			8.00 (32.00)	
48"	24"	RESTRICTED ACCESS				2				8.00 (16.00)	
36"	18"	VISITOR ENTRANCE				2				8.00 (16.00)	
48"	48"	STOP				1				16.00 (16.00)	

4 TRAFFIC SIGN SUMMARY
NOT TO SCALE

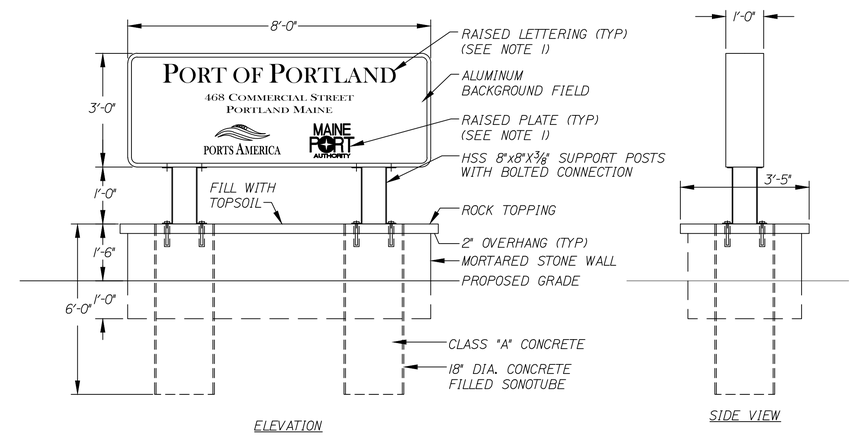

5 OFFICE SIGN WITH FOUNDATION
NOT TO SCALE

OFFICE SIGN NOTES:

1. ALL GRAPHICS WILL BE FLAT CUT ALUMINUM 3/8" THICK STUD MOUNT FLUSH. ART FILES TO BE PROVIDED BY OWNER. ALL MATERIALS SHALL BE NATURAL BRUSHED SATIN FINISH.

2. LIGHT DETAILS NOT SHOWN FOR CLARITY. SEE ELECTRICAL DRAWINGS FOR LIGHTING AND CONDUITS.

3. OFFICE SIGN INCLUDING HSS SUPPORT POSTS SHALL BE BID ALTERNATE NO. 6 UNDER PAY ITEM 621.991.

4. FOUNDATION ELEMENTS INCLUDING CONCRETE FILLED SONOTUBES, STONE WALL, BEDDING, AND TOPSOIL SHALL BE INCIDENTAL TO PAY ITEM 621.90 IN THE BASE BID.

Blais civil engineers
780 BROADWAY
SO. PORTLAND, ME 04106
(207) 767-7300

STATE OF MAINE
DEPARTMENT OF TRANSPORTATION

PROJECT NUMBER 017820.00

PIN 017820.00

STEVE C. BLAIS No. 10684 LICENSED PROFESSIONAL ENGINEER STATE OF MAINE

SIGNATURE	P.E. NUMBER	DATE
10684	-	3/24/11

		BY	DATE
PROJ. MANAGER	CRAIG R. MORIN		
DESIGN-DETAILED	JAV-SGB	-	3/25/11
CHECKED-REVIEWED	SGB	-	3/25/11
DESIGN2-DETAILED2	-	-	-
DESIGN3-DETAILED3	-	-	-
REVISIONS 1			
REVISIONS 2			
REVISIONS 3			
REVISIONS 4			
FIELD CHANGES			

PORTLAND INTERNATIONAL MARINE TERMINAL IMPROVEMENTS
PORTLAND CUMBERLAND COUNTY

LANDSCAPING DETAILS

SHEET NUMBER
C24

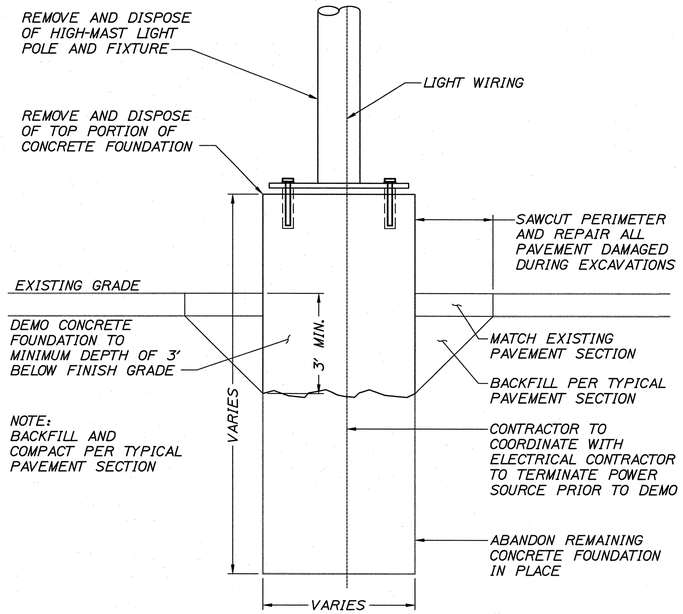

HIGH-MAST LIGHT REMOVAL DETAIL

NTS

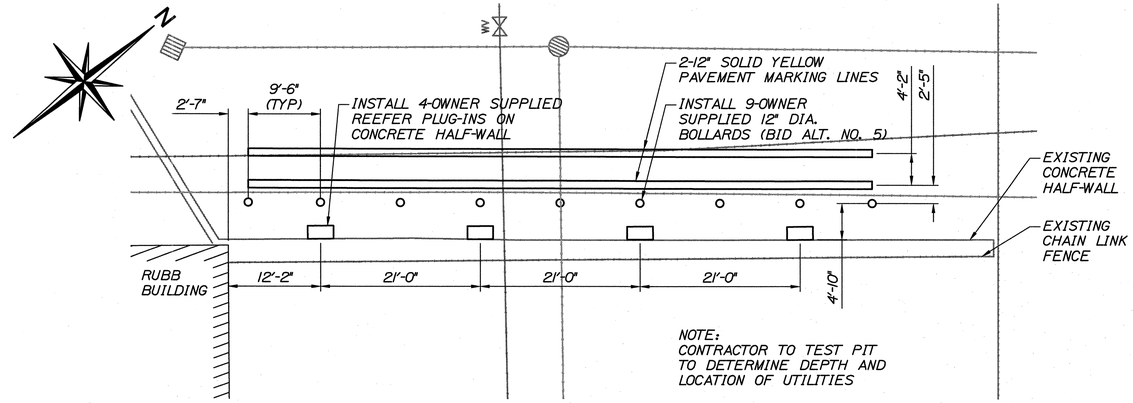

REEFER PLUG-IN LAYOUT

SCALE: 1"=10'-0"

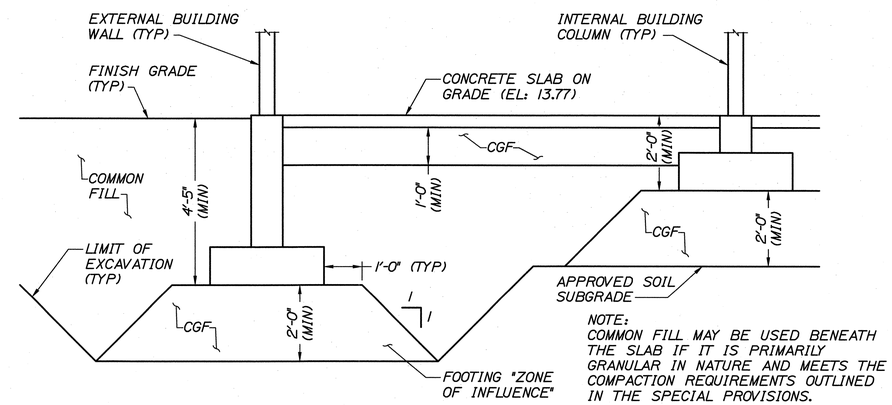

OFFICE BUILDING FOUNDATION SECTION

NTS

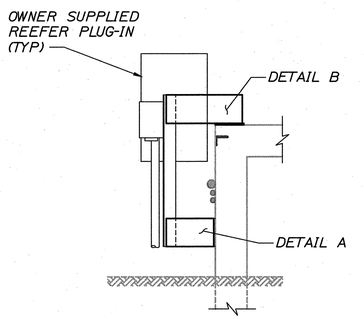

SIDE VIEW

SCALE: 1/2"=1'-0"

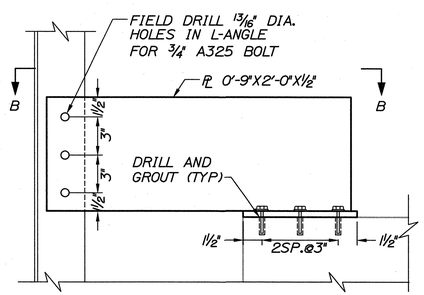

DETAIL B

SCALE: 2"=1'-0"

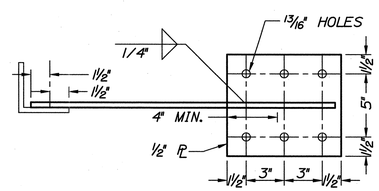

SECTION B-B

SCALE: 2"=1'-0"

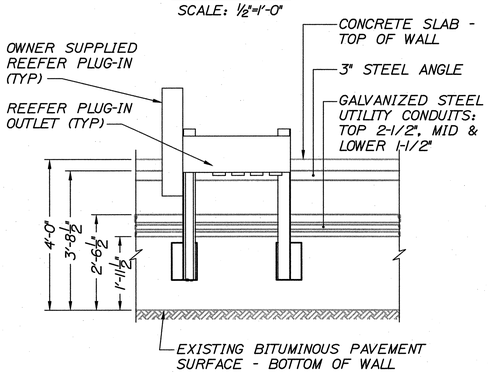

FRONT VIEW

SCALE: 1/2"=1'-0"

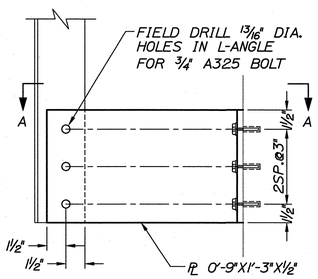

DETAIL A

SCALE: 2"=1'-0"

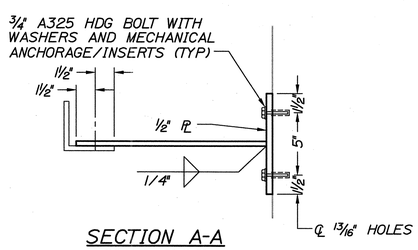

SECTION A-A

SCALE: 2"=1'-0"

REEFER PLUG DETAIL

AS SHOWN

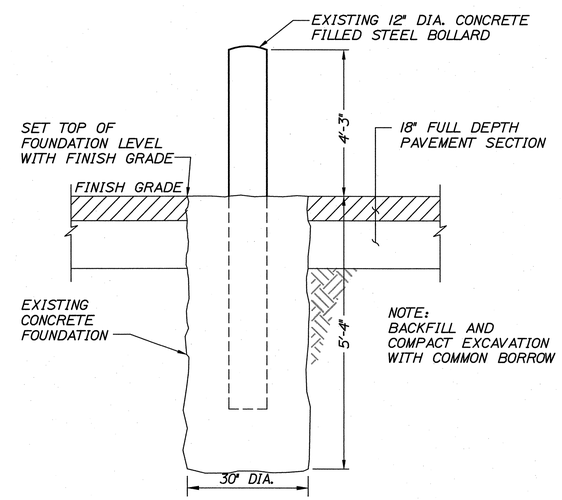

OWNER SUPPLIED BOLLARD INSTALLATION DETAIL (BID ALTERNATE NO. 5)

NTS

HNTB

STATE OF MAINE
DEPARTMENT OF TRANSPORTATION

PROJECT NUMBER 017820.00

PIN 017820.00

STATE OF MAINE
ROLAND A. LAVALLEE
No. 6452
LICENSED PROFESSIONAL ENGINEER

SIGNATURE			
P.E. NUMBER	6452		
DATE	3/25/11		

PROJ. MANAGER	CRAIG R. MORIN		
DESIGN-DETAILED	CRM/JW	HME	3/25/11
CHECKED-REVIEWED	CRM	RAL	3/25/11
DESIGN2-DETAILED2	-	-	-
DESIGN3-DETAILED3	-	-	-
REVISIONS 1	-	-	-
REVISIONS 2	-	-	-
REVISIONS 3	-	-	-
REVISIONS 4	-	-	-
FIELD CHANGES	-	-	-

PORTLAND INTERNATIONAL
MARINE TERMINAL IMPROVEMENTS
PORTLAND CUMBERLAND COUNTY

MISCELLANEOUS DETAILS I

SHEET NUMBER

C25

NOTES:
DEPTH OF BITUMINOUS PAVEMENT AND AGGREGATE COURSES SHALL BE DETERMINED BY STREET CLASSIFICATION.

ANY ALTERNATE TRENCHING OR PAYMENT METHODS SHALL BE APPROVED IN ADVANCE BY THE CITY OF PORTLAND, DEPARTMENT OF PUBLIC SERVICES..

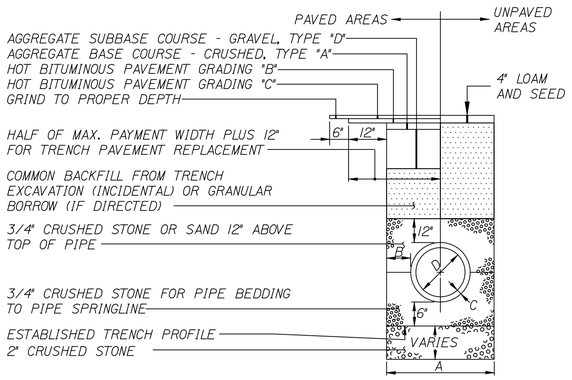

NOTES

1. ALTERNATIVE CONSTRUCTION METHODS OR PAYMENT METHODS SHALL BE APPROVED IN ADVANCE BY THE CITY.
2. IN PAVED AREAS, DEPTHS OF GRAVEL AND HOT MIX ASPHALT PAVEMENT SHALL MATCH THE GREATER OF EXISTING CONDITIONS OR THE REQUIREMENTS FOR THE CORRESPONDING STREET CLASSIFICATION.
3. DIMENSION B SHALL BE SUFFICIENT TO ALLOW CRUSHED STONE BEDDING TO BE PLACED AND COMPACTED UNDER THE HAUNCHES OF THE PIPE; BUT IN ALL CASES DIMENSION B SHALL BE AT LEAST 9".
4. DIMENSION A IS THE MAXIMUM WIDTH ALLOWED FOR CALCULATING PAY QUANTITIES UNDER GRANULAR BORROW, CRUSHED STONE, STRUCTURAL EARTH EXCAVATION, AND STRUCTURAL ROCK EXCAVATION. DIMENSION A SHALL BE BASED ON PIPE DIAMETER D, AS SET FORTH IN THE FOLLOWING TABLE.

PIPE DIAMETER, D (INCHES)	MAX. TRENCH WIDTH, A (FEET)
4	4.0
6	4.0
8	4.0
10	4.0
12	5.0
15	5.0
18	5.0
21	5.0
24	6.0
27	6.0
30	6.0
36	6.0
42	7.0
48	7.0

1 TYPICAL PVC PIPE TRENCH INSTALLATION
NOT TO SCALE

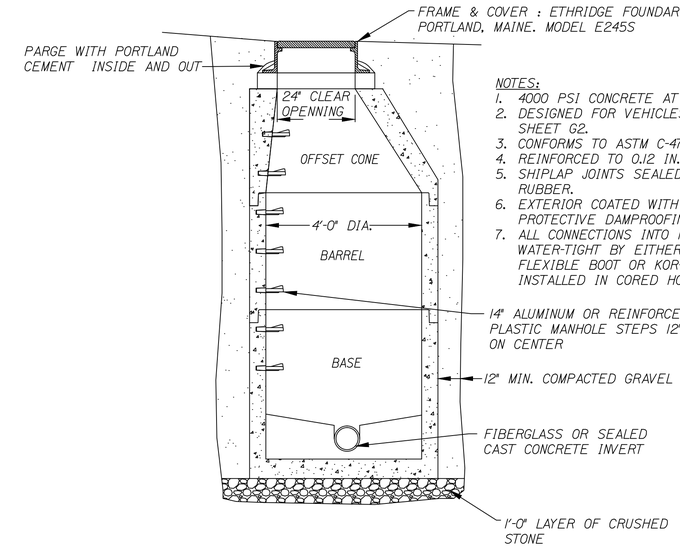

NOTES:
1. 4000 PSI CONCRETE AT 28 DAYS.
2. DESIGNED FOR VEHICLES SHOWN ON SHEET G2.
3. CONFORMS TO ASTM C-478 SPECIFICATIONS.
4. REINFORCED TO 0.12 IN.SQ./L.F.
5. SHIPLAP JOINTS SEALED WITH BUTYL RUBBER.
6. EXTERIOR COATED WITH ASPHALTIC PROTECTIVE DAMPROOFING.
7. ALL CONNECTIONS INTO MANHOLE SHALL BE WATER-TIGHT BY EITHER PRECAST FLEXIBLE BOOT OR KOR-N-SEAL CONNECTOR INSTALLED IN CORED HOLE.

2 PRECAST MANHOLE (SMH)
NOT TO SCALE

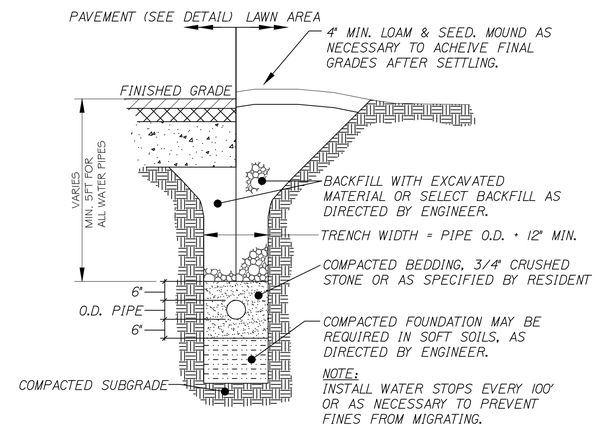

4 UTILITY TRENCH SECTION
NOT TO SCALE

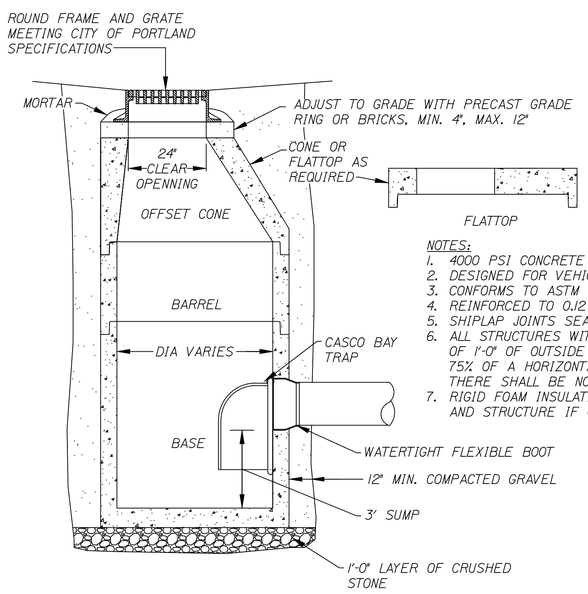

NOTES:
1. 4000 PSI CONCRETE AT 28 DAYS.
2. DESIGNED FOR VEHICLES SHOWN ON SHEET G2.
3. CONFORMS TO ASTM C-478 SPECIFICATIONS.
4. REINFORCED TO 0.12 IN.SQ./L.F.
5. SHIPLAP JOINTS SEALED WITH BUTYL RUBBER.
6. ALL STRUCTURES WITH MULTIPLE PIPES SHALL HAVE A MINIMUM OF 1'-0" OF OUTSIDE SURFACE BETWEEN HOLES, NO MORE THAN 75% OF A HORIZONTAL CROSS-SECTION SHALL BE HOLES, AND THERE SHALL BE NO HOLES CLOSER THAN 3" FROM JOINTS.
7. RIGID FOAM INSULATION SHALL BE PLACED BETWEEN WATER MAIN AND STRUCTURE IF CLEAR SPACE IS LESS THAN 5'

3 CATCH BASIN (CB)
NOT TO SCALE

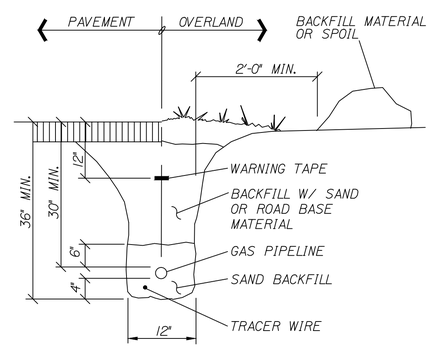

5 GAS PIPING TRENCH SECTION
NOT TO SCALE

NOTE
LOCATION / WARNING TAPE SHALL BE INSTALLED OVER CENTERLINE OF PIPE AT A MAXIMUM OF 24 INCHES BELOW FINISH GRADE.

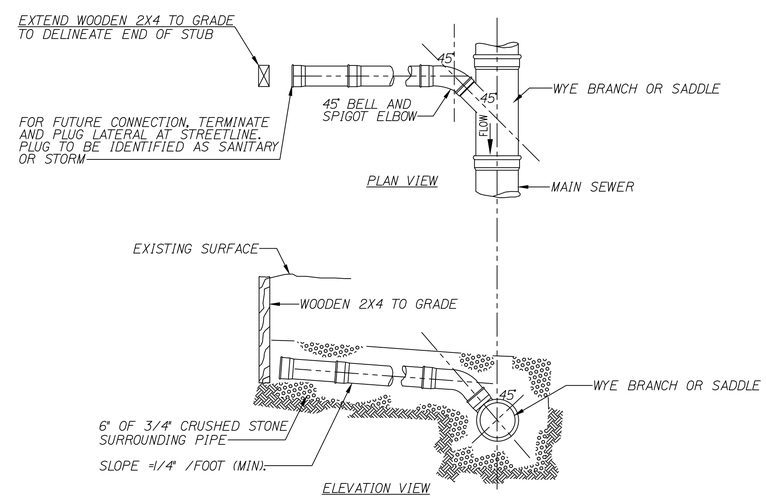

NOTE:
1. ALL NEW AND EXISTING SEWER INSTALLATIONS MUST BE PERFORMED IN ACCORDANCE WITH THE CITY OF PORTLAND WATER AND SEWER DISTRICT'S REGULATIONS.

6 SEWER LATERAL INSTALLATION
NOT TO SCALE

Blais civil engineers
780 BROADWAY
SO. PORTLAND, ME. 04106
(207) 767-7300

STATE OF MAINE
DEPARTMENT OF TRANSPORTATION

PROJECT NUMBER 017820.00

PIN 017820.00

STEVE G. BLAIS No. 10084 LICENSED PROFESSIONAL ENGINEER STATE OF MAINE

PROJ. MANAGER	CRAIG R. MORIN		
DESIGN-DETAILED	JAV-SGB	3/25/11	
CHECKED-REVIEWED	SGB	3/25/11	SIGNATURE
DESIGN2-DETAILED2	-	-	
DESIGN3-DETAILED3	-	-	P.E. NUMBER
REVISIONS 1	REVISED PER CITY COMMENTS	02/11/11	3/24/11
REVISIONS 2			
REVISIONS 3			
REVISIONS 4			
FIELD CHANGES			DATE

PORTLAND INTERNATIONAL
MARINE TERMINAL IMPROVEMENTS
PORTLAND CUMBERLAND COUNTY

MISCELLANEOUS DETAILS II

SHEET NUMBER
C26

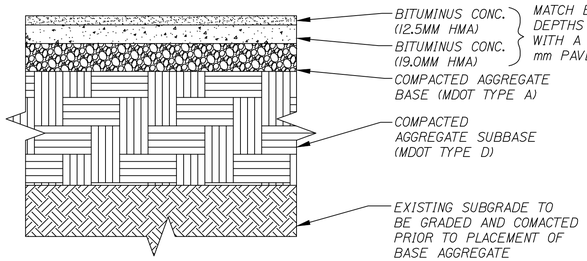

	18" BUILD-UP	30" BUILD-UP	35" BUILD-UP
BITUMINOUS COURSE DEPTH	3"	9"	9"
BASE COURSE DEPTH	3"	7"	10"
SUBBASE COURSE DEPTH	12"	14"	16"
TOTAL DEPTH	18"	30"	35"

1 NEW PAVEMENT DETAIL
NOT TO SCALE

(HORIZONTAL) BEARING AREA OF THRUST BLOCKS IN SQUARE FEET									(VERTICAL) VOLUME OF THRUST BLOCK IN CUBIC YARDS			
FITTING SIZE	TEE, WYE, DEAD END AND HYDRANT	STRADDLE BLOCK	90D BEND PLUGGED CROSS	TEE PLUGGED ON RUN		45D BEND	22-1/2D BEND	11-1/4D BEND	90D BEND	45D BEND	22-1/2D BEND	11-1/4D BEND
				A-1	A-2							
4	1.0	1.6	1.4	1.9	1.4	1.0	---	---	---	---	---	---
6	2.1	3.7	3.0	4.3	3.0	1.6	1.0	---	1.3	---	---	---
8	3.8	6.5	5.3	7.6	5.4	2.9	1.5	1.0	2.3	1.1	---	---
10	5.9	10.2	8.4	11.8	8.4	4.6	2.4	1.2	3.7	1.8	---	---
12	8.5	14.7	12.0	17.0	12.0	6.6	3.4	1.7	5.5	2.8	1.2	---
14	11.5	---	16.3	23.0	16.3	8.9	4.6	2.3	7.6	3.9	1.7	---
16	15.0	26.1	21.3	30.0	21.3	11.6	6.0	3.0	9.9	5.1	2.3	0.9
18	19.0	---	27.0	38.0	27.0	14.6	7.6	3.8	---	---	---	---
20	23.5	40.8	33.3	47.0	33.3	18.1	9.4	4.7	---	---	---	---
24	34.0	58.8	48.0	68.0	48.0	26.2	13.6	6.8	---	---	---	---

NOTES:
1. ABOVE BEARING AREAS BASED ON TEST PRESSURE OF 150 PSI AND AN ALLOWABLE SOIL BEARING STRESS OF 2000 POUNDS PER SQUARE FOOT. TO COMPUTE BEARING AREAS FOR DIFFERENT TEST PRESSURES AND SOIL BEARING STRESSES, USE THE FOLLOWING EQUATION:
   BEARING AREA = (TEST PRESSURE / 150) x (2000 / SOIL BEARING STRESS) x (TABLE VALUE)
2. ABOVE VOLUMES BASED ON TEST PRESSURE OF 150 PSI AND THE WEIGHT OF CONCRETE = 4050 POUNDS PER CUBIC YARD. TO COMPUTE FOR DIFFERENT TEST PRESSURES, USE THE FOLLOWING EQUATION:
   VOLUME = (TEST PRESSURE / 150) x (TABLE VALUE)

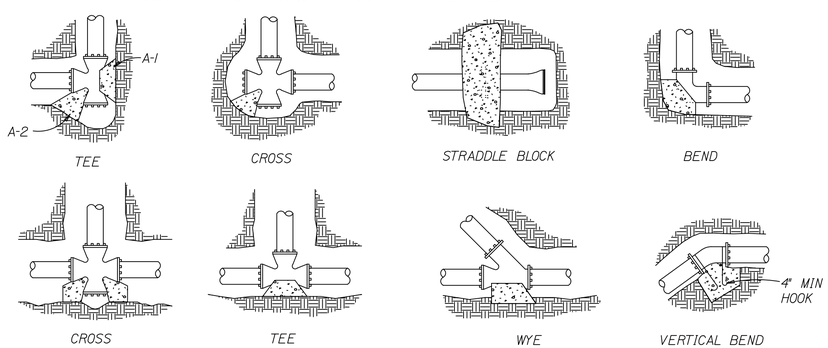

RODS FOR VERTICAL BENDS		
FITTING SIZE	ROD SIZE	EMBEDMENT
12" AND LESS	#6	30"
14"-16"	#8	36"

NOTES:
1. CONCRETE BLOCKING TO BE POURED AGAINST UNDISTURBED EARTH.
2. ALL CONCRETE TO BE CLASS 2400 MINIMUM.
3. INSTALL ISOLATION MATERIAL BETWEEN PIPE AND/OR FITTINGS BEFORE POURING CONCRETE BLOCKING.
4. CONCRETE SHALL BE KEPT CLEAR OF ALL JOINTS AND ACCESSORIES.
5. TIE RODS SHALL BE DEFORMED GALVANIZED COLD ROLLED STEEL, 40000 PSI TENSILE STRENGTH.

4 THRUST BLOCKING
NOT TO SCALE

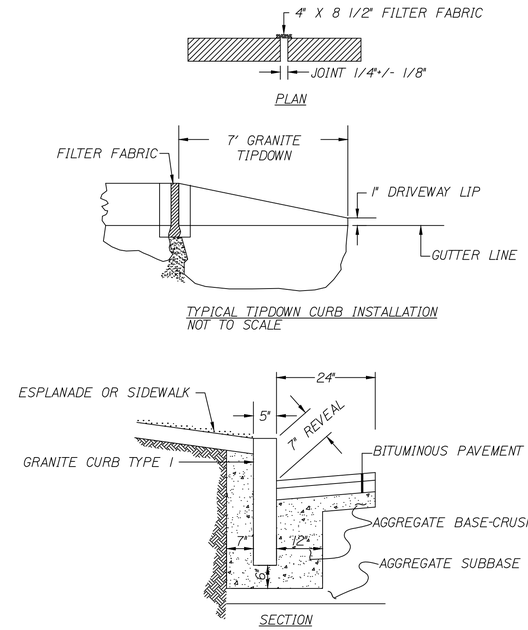

3 INSTALLATION OF NEW GRANITE CURB
NOT TO SCALE

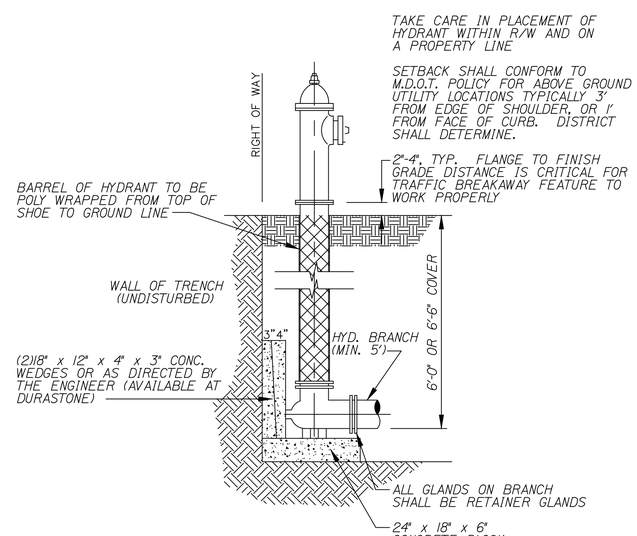

5 FIRE HYDRANT
NOT TO SCALE

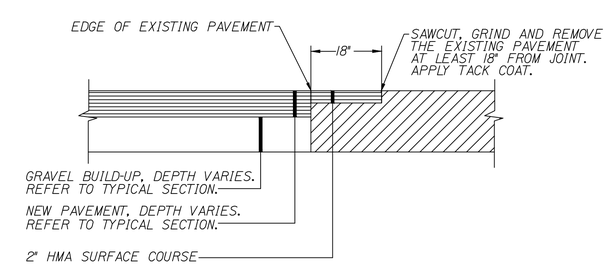

6 PAVEMENT BUTT-JOINT
NOT TO SCALE

Blais civil engineers
780 BROADWAY
SO. PORTLAND, ME 04106
(207) 767-7300

STATE OF MAINE
DEPARTMENT OF TRANSPORTATION

PROJECT NUMBER 017820.00

PIN 017820.00

PROJ. MANAGER	CRAIG R. MORIN	BY	DATE
DESIGN-DETAILED	JAV-SGB	-	3/25/11
CHECKED-REVIEWED	SGB	-	3/25/11
DESIGN2-DETAILED2	-	-	-
DESIGN3-DETAILED3	-	-	-
REVISIONS 1	REVISED PER CITY COMMENTS		02/11/11
REVISIONS 2			
REVISIONS 3			
REVISIONS 4			
FIELD CHANGES			

STATE OF MAINE
STEVE G. BLAIS
No. 10684
LICENSED
PROFESSIONAL ENGINEER

SIGNATURE
P.E. NUMBER 9124/11
DATE

PORTLAND INTERNATIONAL
MARINE TERMINAL IMPROVEMENTS
PORTLAND CUMBERLAND COUNTY

MISCELLANEOUS DETAILS III

SHEET NUMBER
C27

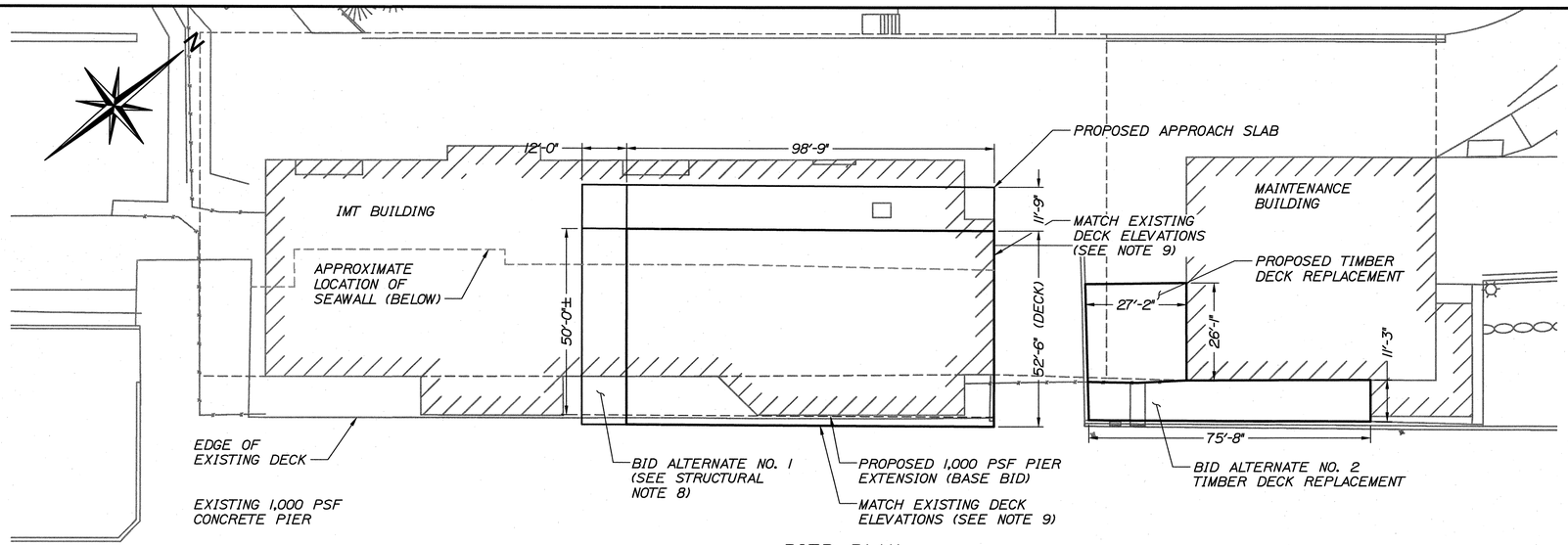

PIER PLAN

SCALE: 1"=20'-0"

10 0 20 40–FT

STRUCTURAL NOTES:

1. STRUCTURAL STEEL CONSTRUCTION SHALL CONFORM TO THE LATEST EDITION OF THE STEEL CONSTRUCTION MANUAL OF THE AMERICAN INSTITUTE OF STEEL CONSTRUCTION, UNLESS OTHERWISE DETAILED.

2. ALL STRUCTURAL STEEL SHAPES SHALL BE ASTM A572, GRADE 50 UNLESS OTHERWISE NOTED.

3. ALL WELDING SHALL BE IN ACCORDANCE WITH THE REQUIREMENTS OF THE STRUCTURAL WELDING CODE, D1.1 AND D3.6, OF THE AMERICAN WELDING SOCIETY (AWS).

4. ALL WELDING TO BE CONTINUOUS SEAL WELDS LEAVING NO CRACKS, VOIDS OR CREVASSES.

5. THE CONTRACTOR SHALL SUBMIT DETAILED SHOP DRAWINGS TO THE ENGINEER FOR REVIEW AND APPROVAL PRIOR TO THE FABRICATION OR DELIVERY OF ANY STEEL (EXCEPT FOR PILES AND CONNECTING PLATES).

6. BOLTED CONNECTIONS BEARING ON STEEL SHALL USE SS WASHERS REGARDLESS OF BOLT MATERIAL.

7. ALL BOLTS EMBEDDED IN CONCRETE SHALL BE ASTM A193, TYPE 316 STAINLESS STEEL UNLESS OTHERWISE NOTED, AND SHALL BE FITTED WITH NUTS AND WASHERS CONFORMING WITH ASTM A194. STAINLESS STEEL SHAPES, BARS AND PLATES SHALL BE TYPE 316.

8. BID ALTERNATE NO. 1 IS FOR CONSTRUCTION OF 600-SF OF PIER WITH 141-SF OF APPROACH SLAB, MULTIPLE 12-FT SECTIONS MAY BE AWARDED.

9. CONTRACTOR SHALL FIELD VERIFY DECK ELEVATIONS ALONG EXISTING PIER AND RAMP AT INTERFACE WITH PROPOSED PIER AND SUBMIT THESE TO THE RESIDENT FOR REVIEW PRIOR TO DECK CONSTRUCTION.

TIMBER NOTES:

1. TIMBER SHALL BE SOUTHERN PINE WITH A STRESS RATING OF 1,200-PSI. TIMBER SHALL BE PRESSURE TREATED IN ACCORDANCE WITH THE SPECIFICATIONS.

2. ALL TIMBER CONSTRUCTION SHALL CONFORM TO THE NATIONAL DESIGN SPECIFICATION FOR WOOD CONSTRUCTION OF THE AMERICAN FOREST AND PAPER ASSOCIATION.

3. ALL CONNECTIONS SHALL BE MADE WITH ¾" DIAMETER ASTM A325, TYPE 1 BOLTS IN 13/16" DIAMETER HOLES AND SHALL HAVE WASHERS ON BOTH ENDS, UNLESS OTHERWISE NOTED.

4. FIELD TREAT ALL CUT AND DRILLED TIMBER SURFACES WITH TWO COATS OF PRESERVATIVE CONTAINING COPPER NAPTHANATE SOLUTION (MIN. 2% METALLIC SOLUTION) PER SPECIFICATIONS.

5. TIMBER DETERIORATION IN AND ADJACENT TO THE WORK SHALL BE BROUGHT TO THE ATTENTION OF THE ENGINEER BEFORE ADVANCING THE WORK.

MARINE CONCRETE NOTES:

1. CONCRETE BASIC DESIGN STRESSES SHALL BE:
   - -FILL FOR PIPE PILES: CLASS "S"
   - -PRECAST: CLASS "P"
     - -Fc'=6,500 PSI AT 28-DAYS
     - -Fc'=4,500 PSI AT TRANSFER
   - -CAST-IN-PLACE (UON): CLASS "LP"

2. MARINE CONCRETE SHALL CONTAIN 5.0 GAL/CY OF CALCIUM CORROSION INHIBITOR ADMIXTURE.

3. PRECAST CONCRETE SHALL HAVE A MAXIMUM PERMEABILITY OF 3,000 COULOMBS.

4. PRE-STRESSING STRAND: 270,000 PSI LOW-RELAX STRAND.

5. CLEARANCES FOR REINFORCEMENT SHALL BE:
   - CAST-IN-PLACE PILE CAPS AND FOOTINGS: 3"
   - PRECAST DECK PLANKS AND CAST IN PLACE OVERLAY: 3"

6. ALL REINFORCING SHALL BE FULLY SUPPORTED ON NON-METALLIC APPROVED CHAIRS. REINFORCING SHALL NOT BE SUPPORTED ON TIMBER BLOCKS, BRICKS, CONCRETE BLOCKS, ETC.

7. CONSTRUCTION JOINTS SHALL BE MADE ONLY AS SHOWN UNLESS APPROVED OTHERWISE.

8. WET CURING OF CONCRETE IS TO BEGIN WITHIN 30 MINUTES AFTER CONCRETE FINISHING, OR AS SOON AS POSSIBLE WITHOUT DAMAGING FINISHED SURFACE.

9. ALL FORMWORK FOR CONCRETE SHALL BE LEFT IN PLACE AND CONCRETE SURFACES SHALL BE COVERED AND KEPT MOIST FOR A PERIOD OF NOT LESS THAN TWO (2) FULL DAYS AFTER CONCRETE PLACEMENTS.

10. CONTRACTOR SHALL SUBMIT DETAILED REINFORCING DRAWINGS INCLUDING BAR AND BENDING SCHEDULES TO THE ENGINEER FOR REVIEW AND APPROVAL PRIOR TO DELIVERY OF ANY REINFORCING STEEL.

11. PROVIDE FULL WIDTH STRUCTURAL BEARING PADS AT ALL PRECAST CONCRETE DECK PLANK TO EDGE BEAM BEARING LOCATIONS; AND EDGE BEAM TO PILE CAP BEARING LOCATIONS. PADS TO BE 0.125 INCH THICK PLAIN ELASTOMERIC BEARING PADS WITH DUROMETER HARDNESS OF 60 PER AASHTO STANDARD SPECIFICATIONS FOR HIGHWAY BRIDGES.

12. ALL FERROUS METAL HANDLING/LIFTING DEVICES AND EXISTING EMBEDDED METALS/ANCHORS NO LONGER IN USE SHALL BE RECESSED OR REMOVED TO A DEPTH OF ONE INCH BELOW THE SURFACE OF THE CONCRETE AND PATCHED WITH AN APPROVED POLYMER-MODIFIED CEMENTITOUS MORTAR. DEVICES LOCATED IN AREAS TO BE TOTALLY ENCASED IN CAST-IN-PLACE CONCRETE SHALL BE GALVANIZED. DEVICES LOCATED IN AREAS NOT TO BE ENCASED IN CAST-IN-PLACE CONCRETE SHALL BE STAINLESS STEEL, UNLESS OTHERWISE NOTED.

REINFORCING STEEL NOTES:

1. REINFORCING BARS SHALL CONFORM TO ASTM A615, GRADE 60 AND SHALL BE EPOXY COATED.

2. SPLICE REINFORCEMENT AS INDICATED:

CLASS "B" SPLICES FOR EPOXY COATED REINFORCEMENT:

BAR SIZE	"OTHER" BARS 5000 PSI	"TOP" BARS* 5000 PSI
#4	2'-0"	2'-3"
#5	2'-6"	2'-10"
#6	3'-0"	3'-4"
#7	3'-5"	3'-11"
#8	4'-2"	4'-11"
#9	5'-6"	6'-2"

*A TOP BAR IS A HORIZONTAL BAR WHERE MORE THAN 12" OF CONCRETE IS CAST DIRECTLY BELOW THE BAR.

3. SPLICES SHALL BE LOCATED SUCH THAT NO MORE THAN 50 PERCENT OF THE REINFORCEMENT IS SPLICED AT ANY ONE LOCATION, UNLESS SHOWN OTHERWISE.

4. ALL HOOKS SHALL BE STANDARD ACI 90 OR 180 DEGREE END HOOKS, UNLESS SHOWN OTHERWISE.

5. SPLICE TOP BARS AT CENTER OF SPAN AND BOTTOM BARS AT THE SUPPORT, UNLESS DETAILED OTHERWISE.

STEEL PIPE PILE NOTES:

1. STEEL PIPE PILES SHALL BE IN ACCORDANCE WITH ASTM A252, GR3 MODIFIED WITH MINIMUM YIELD STRENGTH OF 50 KSI. CONCRETE FILL SHALL BE MAINEDOT CLASS 'S'.

2. PILES SHALL BE COATED WITH FUSION BONDED EPOXY IN ACCORDANCE WITH THE SPECIFICATIONS.

3. PILE SPLICES SHALL NOT BE ALLOWED WITHOUT PRIOR APPROVAL OF THE ENGINEER OF RECORD.

4. ANY PORTION OF PILE CRACKED, DEFORMED, OR OTHERWISE DAMAGED BY PILE DRIVING SHALL BE REPLACED.

STEEL COATINGS:

1. FUSION BONDED EPOXY COATING
   - A. 16" DIA. SUPPORT PILES

2. HOT DIPPED GALVANIZING*
   - A. MAINTENANCE BUILDING BRACING

*PLATES AND ASSEMBLIES ATTACHED TO THE ITEMS LISTED SHALL BE COATED SIMILAR TO THE BASE ELEMENT.

HNTB

STATE OF MAINE
DEPARTMENT OF TRANSPORTATION

PROJECT NUMBER 017820.00

PIN 017820.00

STATE OF MAINE ROLAND A. LAVALLEE No. 6482 LICENSED PROFESSIONAL ENGINEER

SIGNATURE	3/25/11	DATE
P.E. NUMBER		
DATE		

PROJ. MANAGER	CRAIG R. MORIN	
DESIGN-DETAILED	JDW	HME
CHECKED-REVIEWED	CRM	RAL
DESIGN2-DETAILED2	-	-
DESIGN3-DETAILED3	-	-
REVISIONS 1	-	-
REVISIONS 2	-	-
REVISIONS 3	-	-
REVISIONS 4	-	-
FIELD CHANGES	-	-

PORTLAND INTERNATIONAL MARINE TERMINAL IMPROVEMENTS
PORTLAND CUMBERLAND COUNTY

PIER PLAN AND GENERAL NOTES

SHEET NUMBER

S1

M:\jobs\050021 - Maine Port Authority\002 - Portland DMT Facility\CADD\ARCS-S1PIER.dwg, 3/11/2011 2:39:55 PM, mwilliott

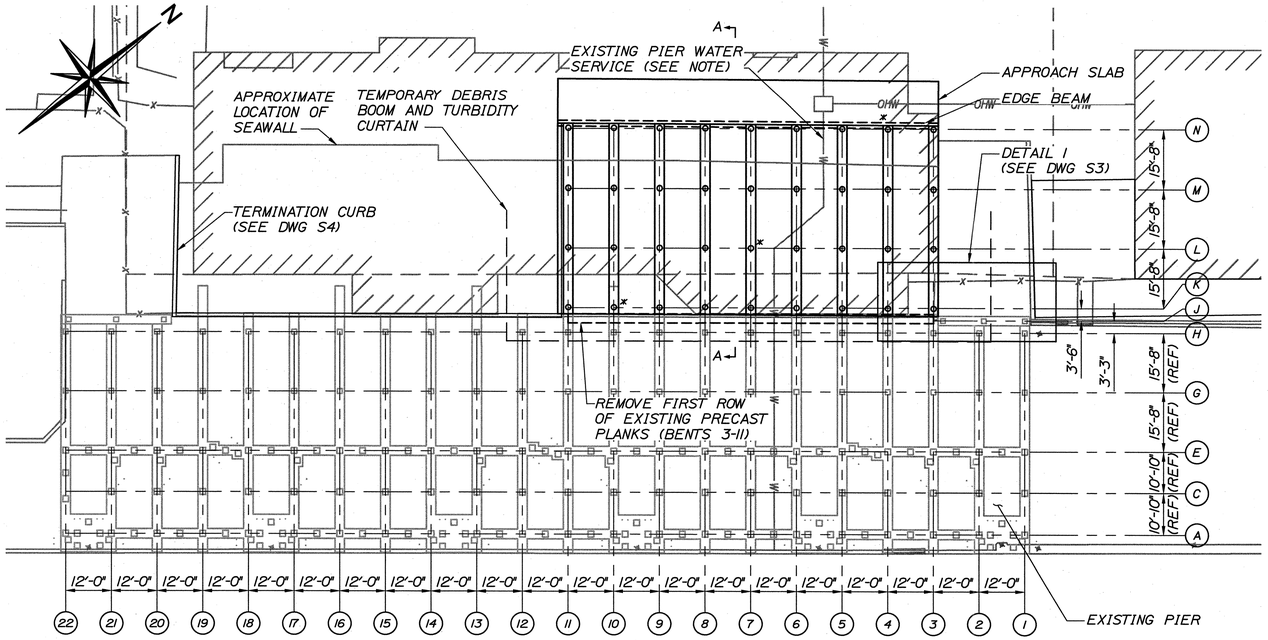

NOTE:
CONTRACTOR TO PROVIDE EMBEDDED CONCRETE INSERTS AND HANGER RODS WITH UTILITY BRACKETS ALONG UNDERSIDE OF PROPOSED PIER TO SUPPORT PIER WATER SERVICE.

PIER FRAMING PLAN

SCALE: 1"=20'-0"

10 0 20 40-FT

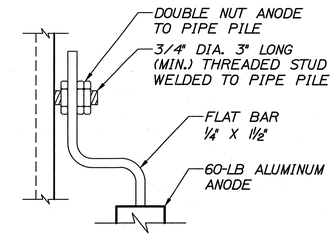

DETAIL 1

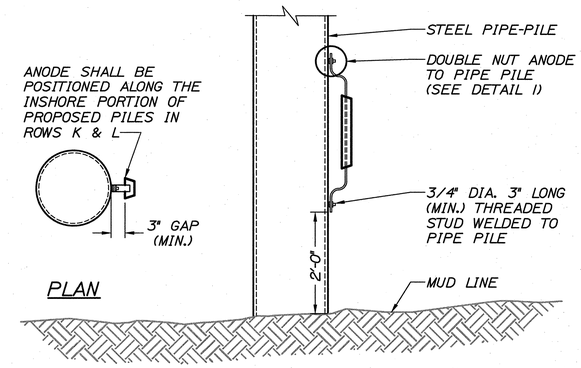

PLAN

ELEVATION

ANODE DETAIL

NTS

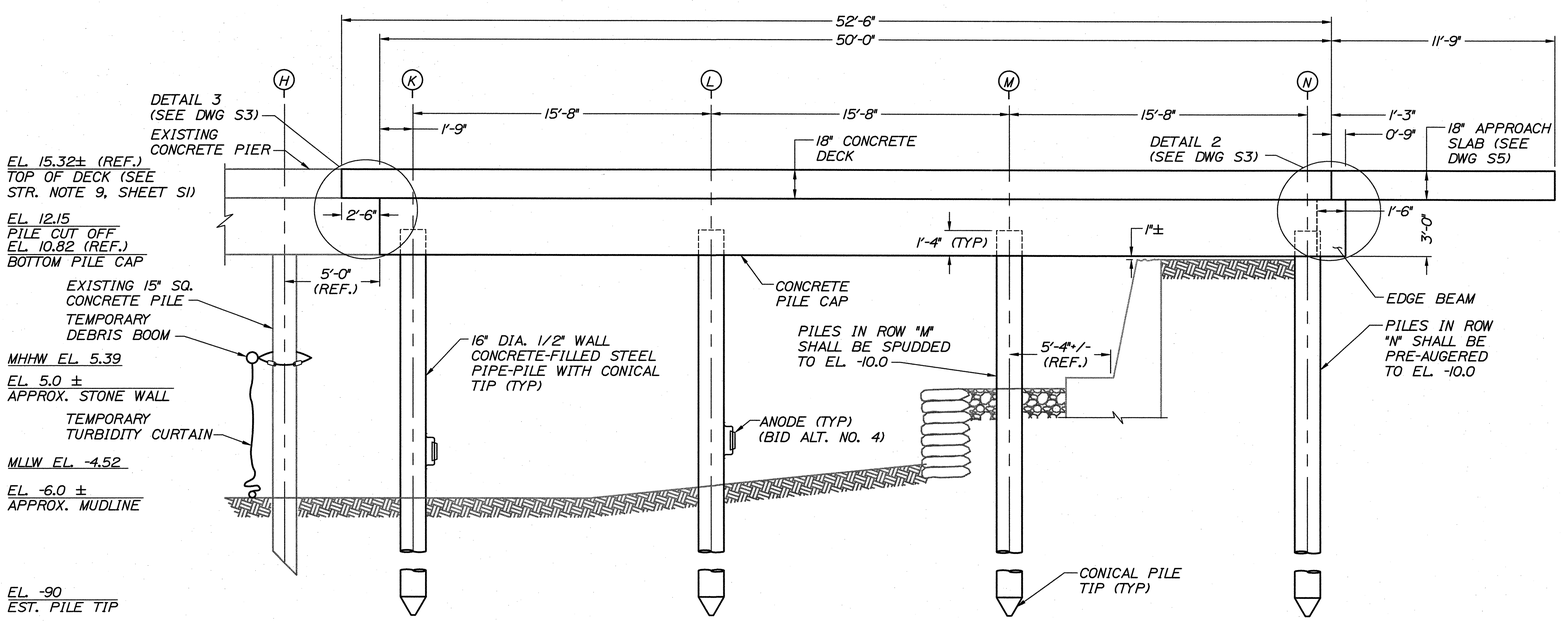

NOTE:
ELEVATIONS SHOWN ARE NGVD29. FOR CONVERSIONS TO MLW AND MLLW SEE SHEET G2.

SECTION A-A

SCALE: 1/4"=1'-0"

PILE NOTES:

1. ULTIMATE CAPACITY OF PILES:
   -PILES SHALL BE DRIVEN TO A MINIMUM ULTIMATE CAPACITY OF 560-KIPS
   -THE DESIGN PILE LOAD IS 280-KIPS

2. PILES SHALL BE 16"Ø, 1/2" WALL STEEL PIPE-PILES WITH CONCRETE FILL. PILES SHALL BE FITTED WITH A CLOSED-ENDED, CONICAL PILE TIP THAT MEETS THE REQUIREMENTS OF SECTION 31 62 17 AND MAINEDOT DETAIL 501(01). PILES SHALL BE FABRICATED OF SEAMLESS OR STRAIGHT-SEAMED MATERIAL. SPIRAL WELDED PIPE PILE IS NOT PERMITTED.

3. ESTIMATE OF PILES REQUIRED: 36 @ 103 FT

4. PILES SHALL NOT BE OUT OF POSITION SHOWN BY MORE THAN 6 INCHES LONGITUDINALLY ALONG THE PILE CAP, AND 2 INCHES TRANSVERSELY ACROSS THE WIDTH OF PILE CAP.

5. THE CONTRACTOR SHALL PERFORM AND SUBMIT WAVE EQUATION ANALYSES FOR REVIEW AND ACCEPTANCE BY THE ENGINEER. THE CONTRACTOR SHALL DETERMINE A STOPPING CRITERIA BASED ON THE WAVE EQUATION ANALYSIS, WHICH SHALL INCLUDE THE BLOWS PER INCH AND THE NUMBER OF ONE INCH INTERVALS AT WHICH PILE INSTALLATION MAY BE TERMINATED.

6. THE CONTRACTOR SHALL PERFORM A TOTAL OF THREE (3) DYNAMIC PILE LOAD TESTS WITH SUBSEQUENT 24-HOUR RESTRIKE TO EVALUATE THE PERFORMANCE OF THE HAMMER-PILE SYSTEM; CALCULATE STRESSES IN THE PILE DURING DRIVING; AND CONFIRM THE MINIMUM ULTIMATE CAPACITY OF THE PILE. THE REQUIRED ULTIMATE CAPACITY OF THE PILES IS EQUAL TO THE DESIGN PILE LOAD MULTIPLIED BY 2.0 PER IBC DESIGN.

7. DYNAMIC TESTING SHALL BE PERFORMED DURING THE INITIAL DRIVE AND DURING THE 24-HOUR RESTRIKE.

8. PILES SHALL BE DRIVEN FROM THE EXISTING PIER, OR A MINIMUM DISTANCE OF 25-FT FROM THE SEAWALL.

9. ANODES ARE INCLUDED AS BID ALTERNATE NO. 4.

* INDICATES LOCATIONS WHERE DYNAMIC PILE LOAD TESTS SHALL BE PERFORMED.

HNTB

STATE OF MAINE
DEPARTMENT OF TRANSPORTATION

PROJECT NUMBER 017820.00

PIN 017820.00

STATE OF MAINE ROLAND A. LAVALLEE No. 9452 LICENSED PROFESSIONAL ENGINEER

		BY	DATE
PROJ. MANAGER	CRAIG R. MORIN		
DESIGN-DETAILED	JDW	HME	3/25/11
CHECKED-REVIEWED	CRM	RAL	3/25/11
DESIGN2-DETAILED2	-	-	-
DESIGN3-DETAILED3	-	-	-
REVISIONS 1	-		-
REVISIONS 2	-		-
REVISIONS 3	-		-
REVISIONS 4	-		-
FIELD CHANGES	-		-

P.E. NUMBER

SIGNATURE

DATE

PORTLAND INTERNATIONAL MARINE TERMINAL IMPROVEMENTS
PORTLAND CUMBERLAND COUNTY

PIER FRAMING PLAN AND ELEVATION

SHEET NUMBER
S2

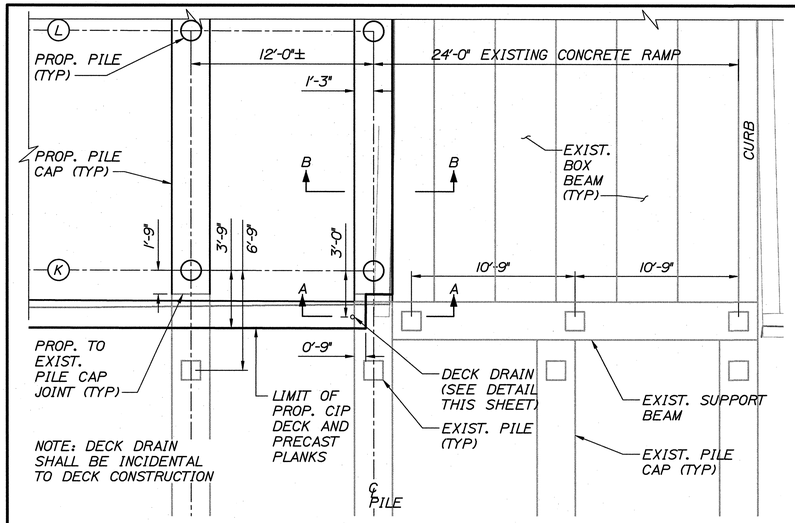

DETAIL 1
SCALE: 1"=5'

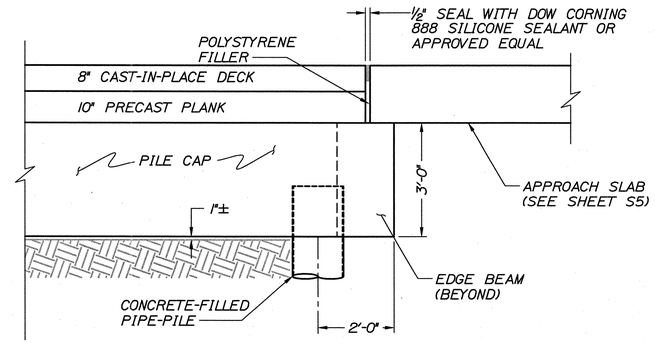

DETAIL 2
SCALE: ½"=1'-0"

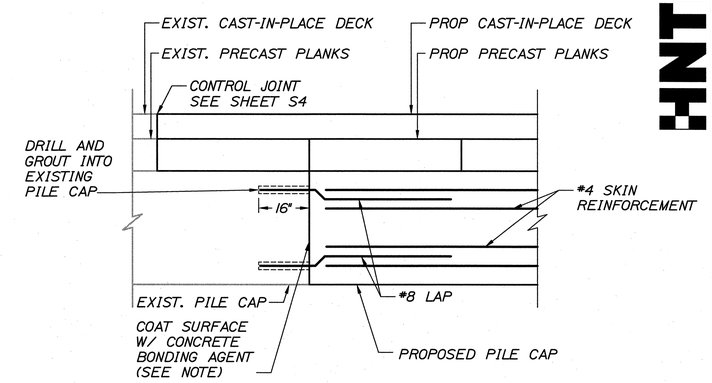

NOTE:
EXISTING CONCRETE SURFACES TO RECEIVE CONCRETE SHALL BE ROUGHENED TO A MINIMUM AMPLITUDE OF ¼" AND COATED WITH A PRODUCT LISTED ON THE MAINEDOT PRE-QUALIFIED LIST OF CONCRETE BONDING AGENTS.

DETAIL 3
SCALE: ½"=1'-0"

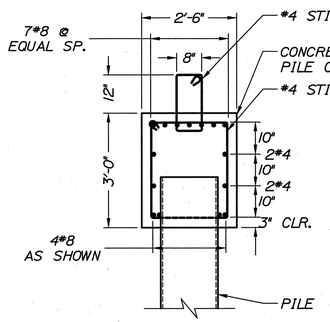

SECTION C-C
SCALE: ½"=1'-0"

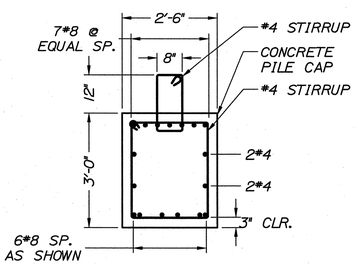

SECTION D-D
SCALE: ½"=1'-0"

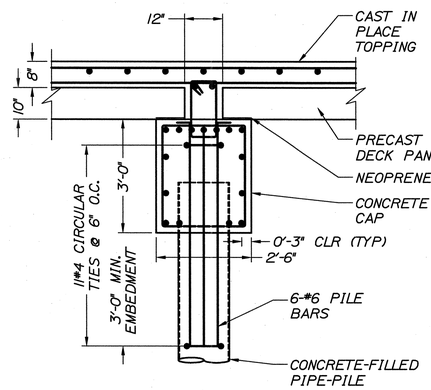

TYPICAL SECTION AT PILE
SCALE: ½"=1'-0"

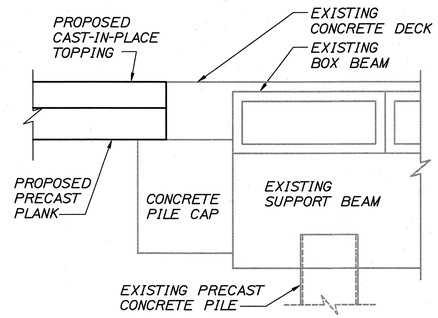

SECTION A-A
SCALE: ½"=1'-0"

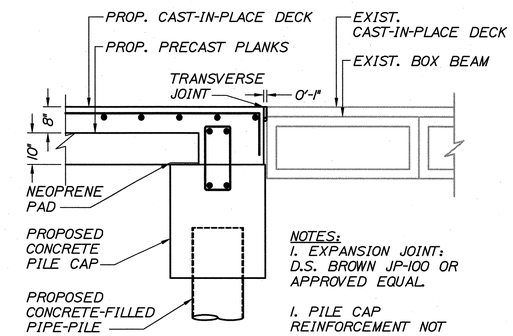

NOTES:
1. EXPANSION JOINT: D.S. BROWN JP-100 OR APPROVED EQUAL.
1. PILE CAP REINFORCEMENT NOT SHOWN FOR CLARITY

SECTION B-B
SCALE: ½"=1'-0"

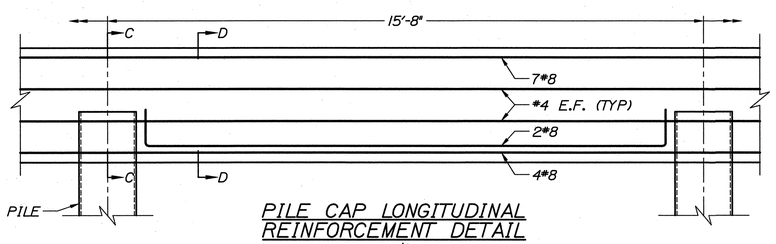

PILE CAP LONGITUDINAL REINFORCEMENT DETAIL
SCALE: ½"=1'-0"

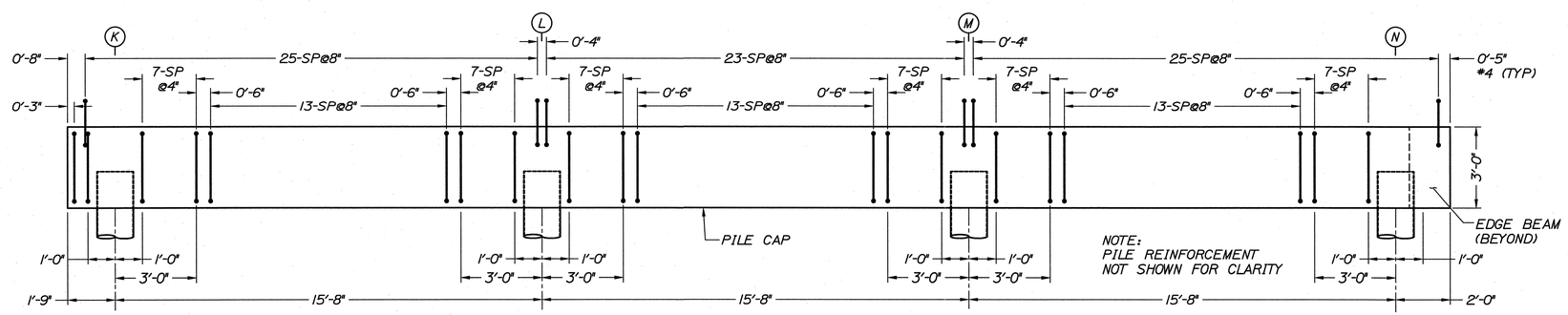

NOTE:
PILE REINFORCEMENT NOT SHOWN FOR CLARITY

BENT REINFORCEMENT DETAIL
SCALE: 3/16"=1'-0"

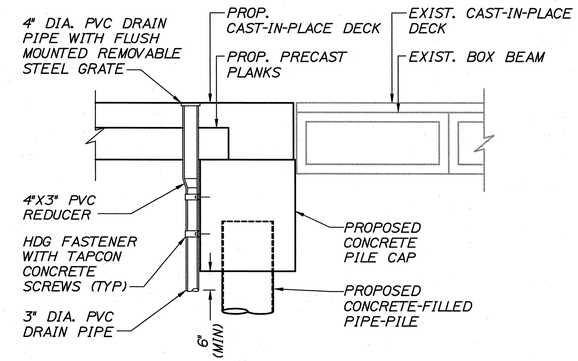

DECK DRAIN DETAIL
SCALE: ½"=1'-0"

NOTES:
1. DECK AND PILE CAP REINFORCEMENT NOT SHOWN FOR CLARITY

HNTB

STATE OF MAINE
DEPARTMENT OF TRANSPORTATION

PROJECT NUMBER 017820.00

PIN 017820.00

STATE OF MAINE ROLAND A. LAVALLEE No. 6452 LICENSED PROFESSIONAL ENGINEER

SIGNATURE		
6452	P.E. NUMBER	
3/25/11	DATE	

PROJ. MANAGER	CRAIG R. MORIN		
DESIGN-DETAILED	AET	HME	3/25/11
CHECKED-REVIEWED	CRM	RAL	3/25/11
DESIGN2-DETAILED2	-	-	-
DESIGN3-DETAILED3	-	-	-
REVISIONS 1	-	-	-
REVISIONS 2	-	-	-
REVISIONS 3	-	-	-
REVISIONS 4	-	-	-
FIELD CHANGES	-	-	-

PORTLAND INTERNATIONAL MARINE TERMINAL IMPROVEMENTS
CUMBERLAND COUNTY
PORTLAND

PILE CAP DETAILS

SHEET NUMBER
S3

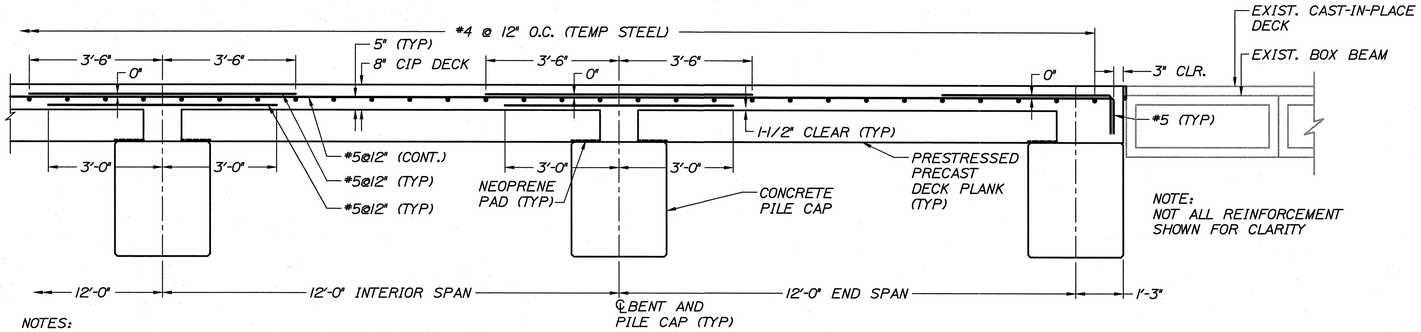

NOTES:
1. CONCRETE FOR CAST-IN-PLACE DECK SHALL BE CLASS LP.
2. REINFORCING SHALL BE GRADE 60 EPOXY COATED AND CONFORM TO ASTM A615 AND A775.
3. CHAMFER ALL EDGES 1" @ 45-DEGREES EXCEPT WHERE NOTED.
4. MINIMUM CONCRETE COVERAGE OVER REINFORCING SHALL BE 3".
5. SPLICING OF REINFORCEMENT: #5 BARS-2'-10", #4 BARS-2'-3".
6. THREADED INSERT SHALL HAVE A SAFE WORKING LOAD IN TENSION OF 1,000-LBS.

TYPICAL DECK SECTION
SCALE: 1/2"=1'-0"

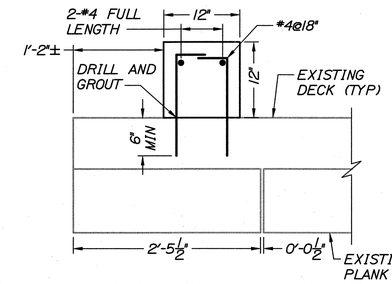

TERMINATION CURB DETAIL BETWEEN BENTS 13-16
SCALE: 1"=1'-0"

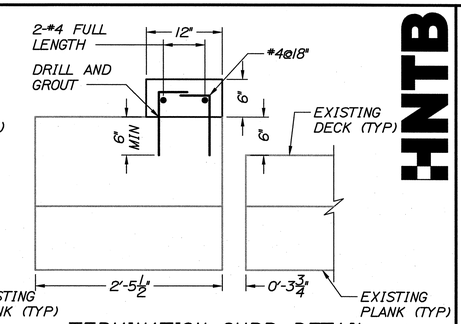

TERMINATION CURB DETAIL BETWEEN BENTS 11-13 & 16-19 (±)
SCALE: 1"=1'-0"

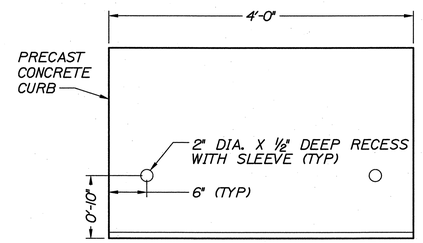

ELEVATION

NOTES:
1. THREADED COUPLER THREADS SHALL BE GREASED PRIOR TO BEING CAPPED.
2. FILL RECESS CURB JOINTS AND CHAMFER WITH SIKA IA OR APPROVED EQUAL AFTER INSTALLATION OF CURB.
3. SEAL DECK INTERFACE WITH SIKA IA.

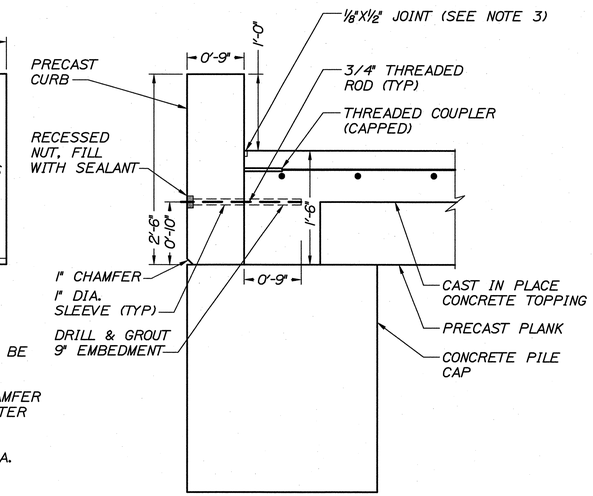

SECTION

TERMINATION CURB DETAIL PARALLEL TO PILE CAP
SCALE: 1"=1'-0"

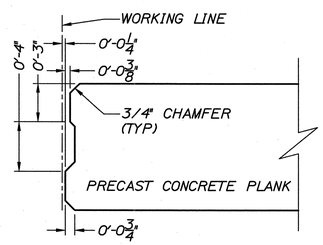

SHEAR KEY DETAIL
SCALE: 2"=1'-0"

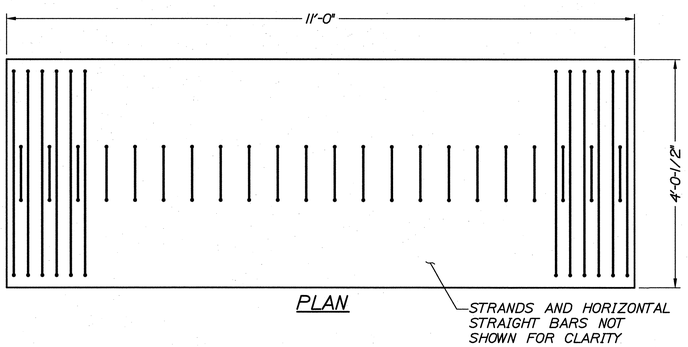

PLAN

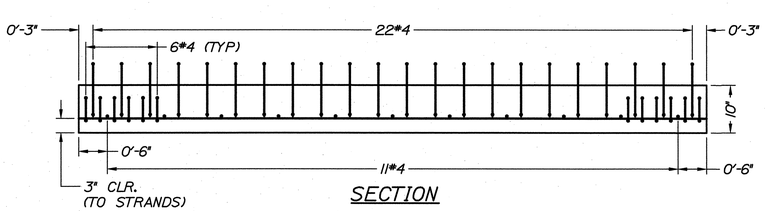

SECTION

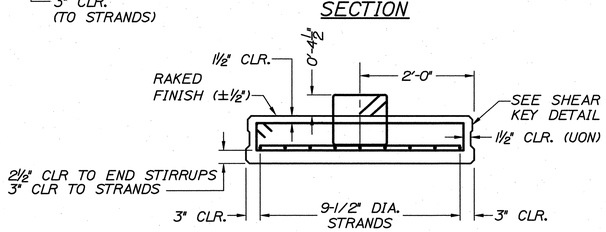

END SECTION

TYPICAL PRESTRESSED SLAB DETAILS
SCALE: 3/4"=1'-0"

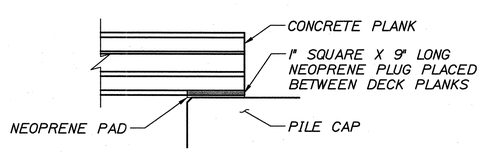

SECTION A-A

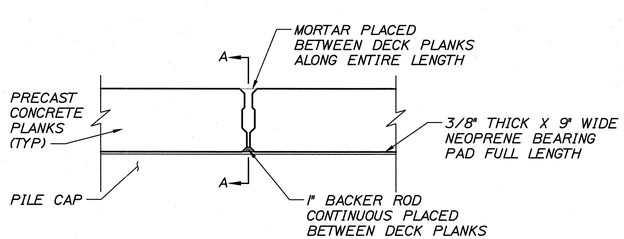

DECK PLANK ASSEMBLY DETAIL
SCALE: 1"=1'-0"

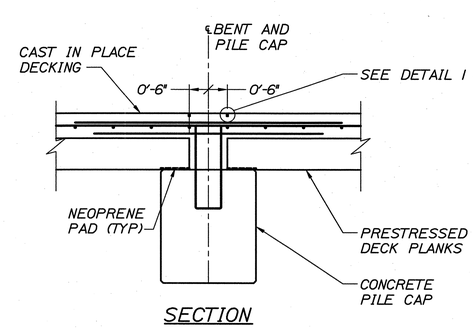

SECTION

CONTROL JOINT DETAIL
SCALE: 1/2"=1'-0"

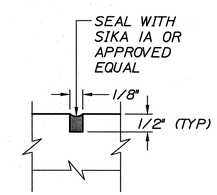

DETAIL 1

HNTB

STATE OF MAINE
DEPARTMENT OF TRANSPORTATION

PROJECT NUMBER 017820.00

PIN 017820.00

STATE OF MAINE — ROLAND A. LAVALLEE No. 6452 — LICENSED PROFESSIONAL ENGINEER

SIGNATURE — P.E. NUMBER — DATE 3/25/11

PROJ. MANAGER CRAIG R. MORIN	BY	DATE
DESIGN-DETAILED	AET	3/25/11
CHECKED-REVIEWED	CRM	3/25/11
DESIGN2-DETAILED2	-	-
DESIGN3-DETAILED3	-	-
REVISIONS 1	-	-
REVISIONS 2	-	-
REVISIONS 3	-	-
REVISIONS 4	-	-
FIELD CHANGES	-	-

PORTLAND INTERNATIONAL MARINE TERMINAL IMPROVEMENTS
PORTLAND — CUMBERLAND COUNTY

DECK DETAILS

SHEET NUMBER
S4

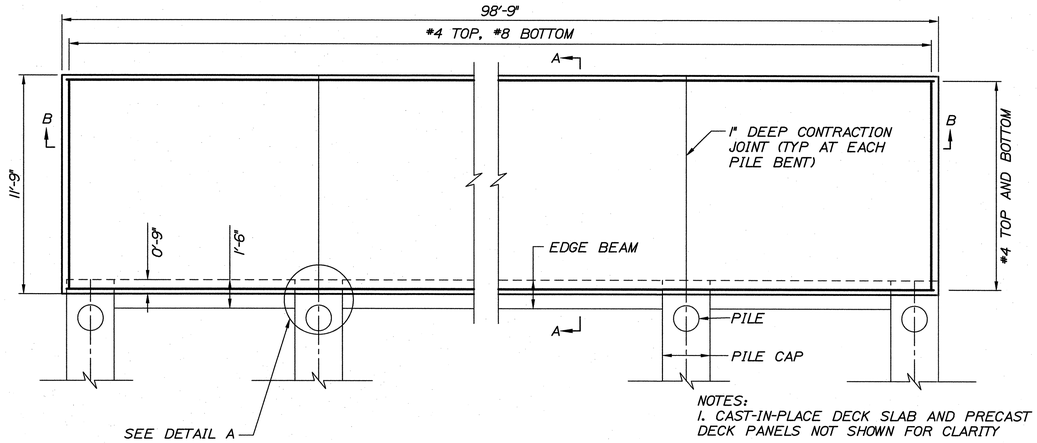

NOTES:
1. CAST-IN-PLACE DECK SLAB AND PRECAST DECK PANELS NOT SHOWN FOR CLARITY

2. CONTRACTION JOINTS SHALL BE SOFT CUT IMMEDIATELY AFTER CONCRETE SURFACE IS FIRM ENOUGH TO KEEP A TROWELED GROOVE WITHOUT DAMAGE.

APPROACH SLAB PLAN
SCALE: 1/2"=1'-0"

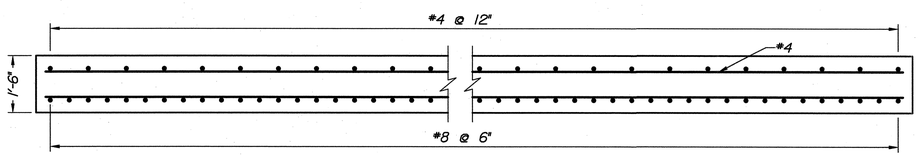

SECTION B-B
SCALE: 1/2"=1'-0"

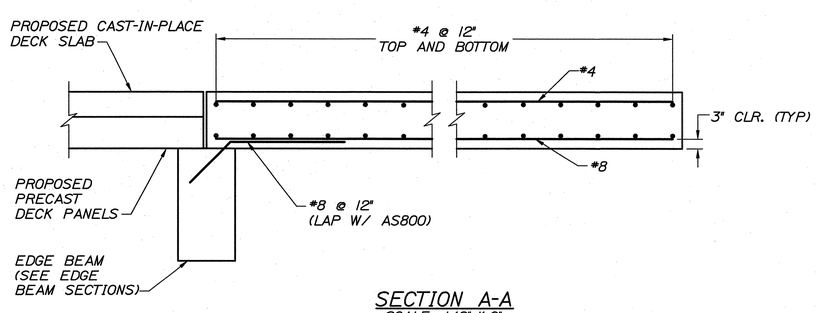

SECTION A-A
SCALE: 1/2"=1'-0"

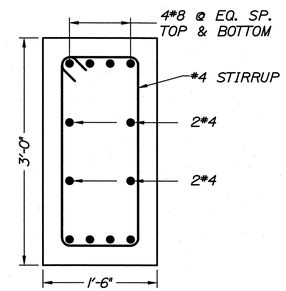

EDGE BEAM SECTION C-C
SCALE: 1"=1'-0"

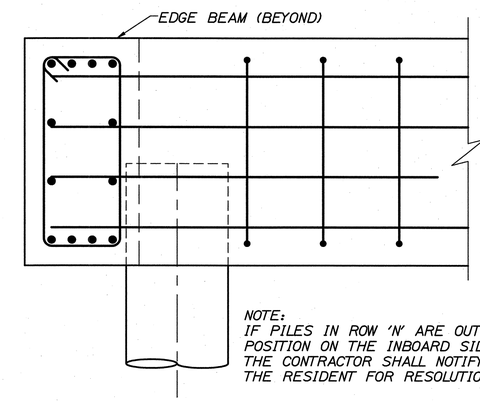

NOTE:
IF PILES IN ROW 'N' ARE OUT OF POSITION ON THE INBOARD SIDE, THE CONTRACTOR SHALL NOTIFY THE RESIDENT FOR RESOLUTION.

EDGE BEAM SECTION D-D
SCALE: 1"=1'-0"

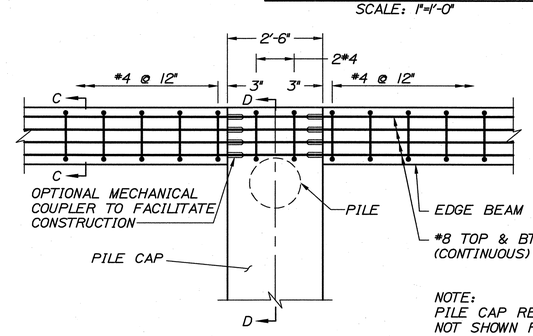

NOTE:
PILE CAP REINFOCRMENT NOT SHOWN FOR CLARITY

DETAIL A
SCALE: 1/2"=1'-0"

HNTB

STATE OF MAINE
DEPARTMENT OF TRANSPORTATION

PROJECT NUMBER 017820.00

PIN 017820.00

STATE OF MAINE
ROLAND A. LAVALLEE
No. 6452
LICENSED PROFESSIONAL ENGINEER

		BY	DATE
PROJ. MANAGER	CRAIG R. MORIN		
DESIGN-DETAILED	JDW	HME	3/25/11
CHECKED-REVIEWED	CRM	RAL	3/25/11
DESIGN2-DETAILED2	-	-	-
DESIGN3-DETAILED3	-	-	-
REVISIONS 1	-		-
REVISIONS 2	-		-
REVISIONS 3	-		-
REVISIONS 4	-		-
FIELD CHANGES	-		-

SIGNATURE
6452
P.E. NUMBER
3/25/11
DATE

PORTLAND INTERNATIONAL
MARINE TERMINAL IMPROVEMENTS
PORTLAND CUMBERLAND COUNTY

APPROACH SLAB DETAILS

SHEET NUMBER
S5

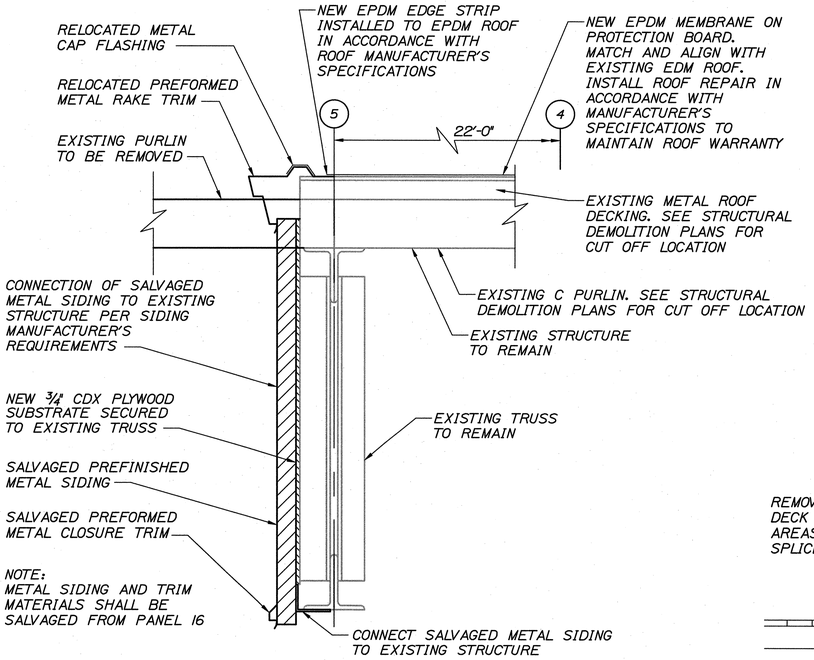

ROOF EDGE AT DEMOLITION LIMIT DETAIL

NTS

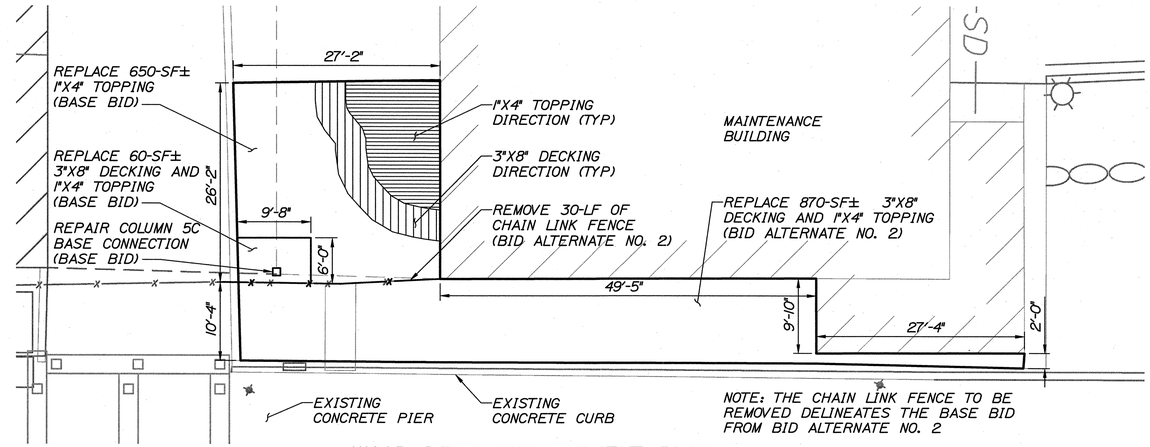

WOOD DECK REPLACEMENT PLAN

SCALE: 1"=10'-0"

5 0 10 20-FT

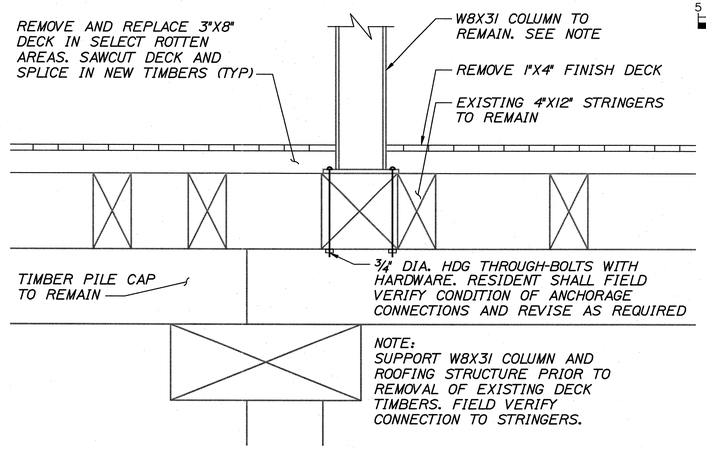

COLUMN 5C REPAIRS

SCALE: 1"=1'-0"

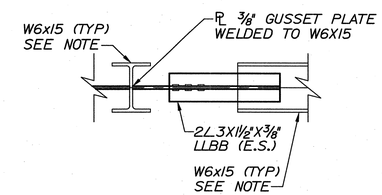

SECTION B-B

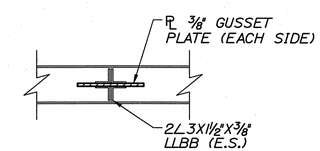

SECTION A-A

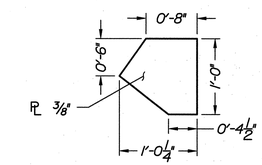

GUSSET PLATE

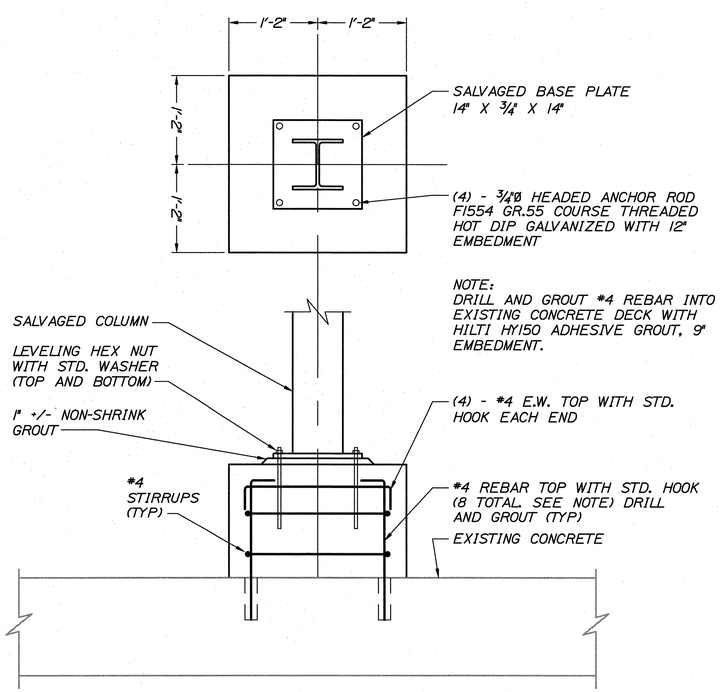

NEW COLUMN BASE DETAIL

NTS

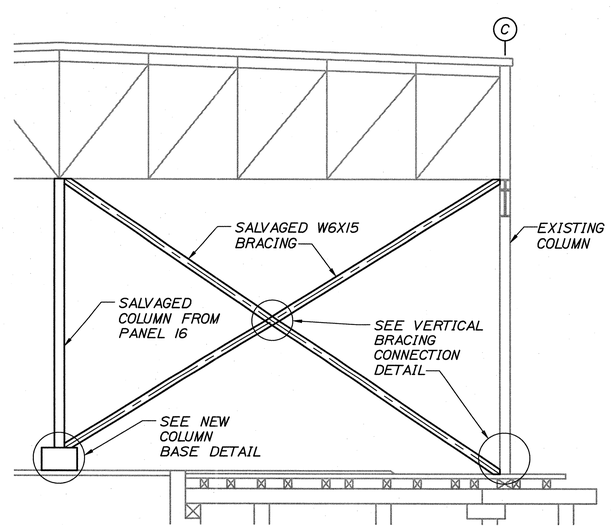

PANEL 5 VERTICAL BRACING SUPPORT DETAIL

NTS

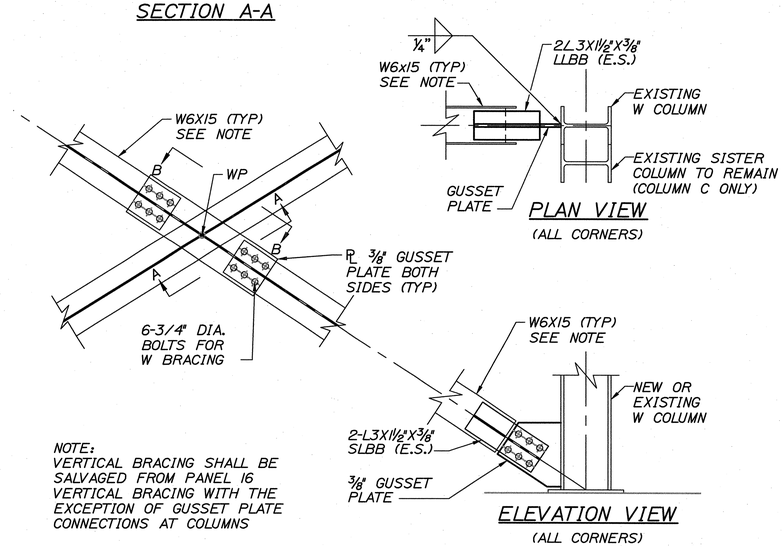

NOTE:
VERTICAL BRACING SHALL BE SALVAGED FROM PANEL 16 VERTICAL BRACING WITH THE EXCEPTION OF GUSSET PLATE CONNECTIONS AT COLUMNS

VERTICAL BRACING CONNECTION DETAIL

NTS

HNTB

STATE OF MAINE
DEPARTMENT OF TRANSPORTATION

PROJECT NUMBER 017820.00

PIN 017820.00

STATE OF MAINE ROLAND A. LAVALLEE No. 6452 LICENSED PROFESSIONAL ENGINEER

SIGNATURE
P.E. NUMBER
DATE

PROJ. MANAGER	CRAIG R. MORIN		
DESIGN-DETAILED	JDW	BY	DATE
CHECKED-REVIEWED	CRM	HWE	3/25/11
DESIGN2-DETAILED2	-	RAL	3/25/11
DESIGN3-DETAILED3	-	-	-
REVISIONS 1	-	-	-
REVISIONS 2	-	-	-
REVISIONS 3	-	-	-
REVISIONS 4	-	-	-
FIELD CHANGES	-	-	-

PORTLAND INTERNATIONAL
MARINE TERMINAL IMPROVEMENTS
PORTLAND CUMBERLAND COUNTY

MAINTENANCE BUILDING
MODIFICATION DETAILS

SHEET NUMBER

S6

Bartlett Design
LIGHTING & ELECTRICAL ENGINEERING
942 WASHINGTON STREET, BATH, ME 04530
TEL (207) 443-5447 FAX (207) 443-5560

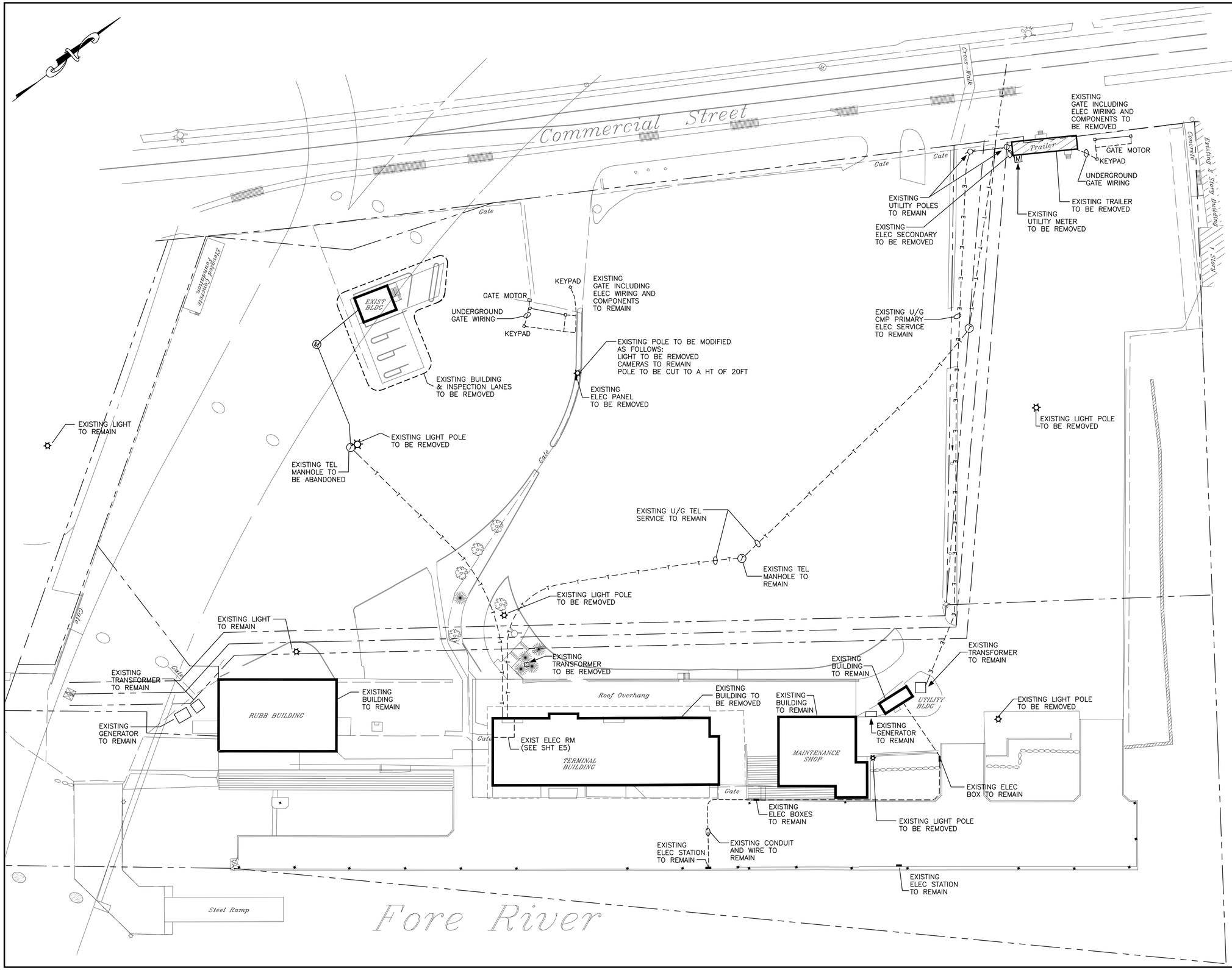

STATE OF MAINE
DEPARTMENT OF TRANSPORTATION

PROJECT NUMBER 017820.00

PIN 017820.00

STATE OF MAINE
LAWRENCE E. BARTLETT
No. 7928
LICENSED
PROFESSIONAL ENGINEER

PROJ. MANAGER	CRAIG R. MORIN	BY	DATE
DESIGN-DETAILED	LEB	JLC	3/25/11
CHECKED-REVIEWED	LEB	LEB	3/25/11
DESIGN2-DETAILED2	-	-	-
DESIGN3-DETAILED3	-	-	-
REVISIONS 1	-		-
REVISIONS 2	-		-
REVISIONS 3	-		-
REVISIONS 4	-		-
FIELD CHANGES	-		-

Lawrence E. Bartlett
SIGNATURE

7928
P.E. NUMBER

03/25/11
DATE

PORTLAND INTERNATIONAL
MARINE TERMINAL IMPROVEMENTS
PORTLAND CUMBERLAND COUNTY

EXISTING SITE ELECTRICAL

SHEET NUMBER

E1

Bartlett Design
LIGHTING & ELECTRICAL ENGINEERING
942 WASHINGTON STREET, BATH, ME 04530
TEL (207) 443-5447 FAX (207) 443-5560

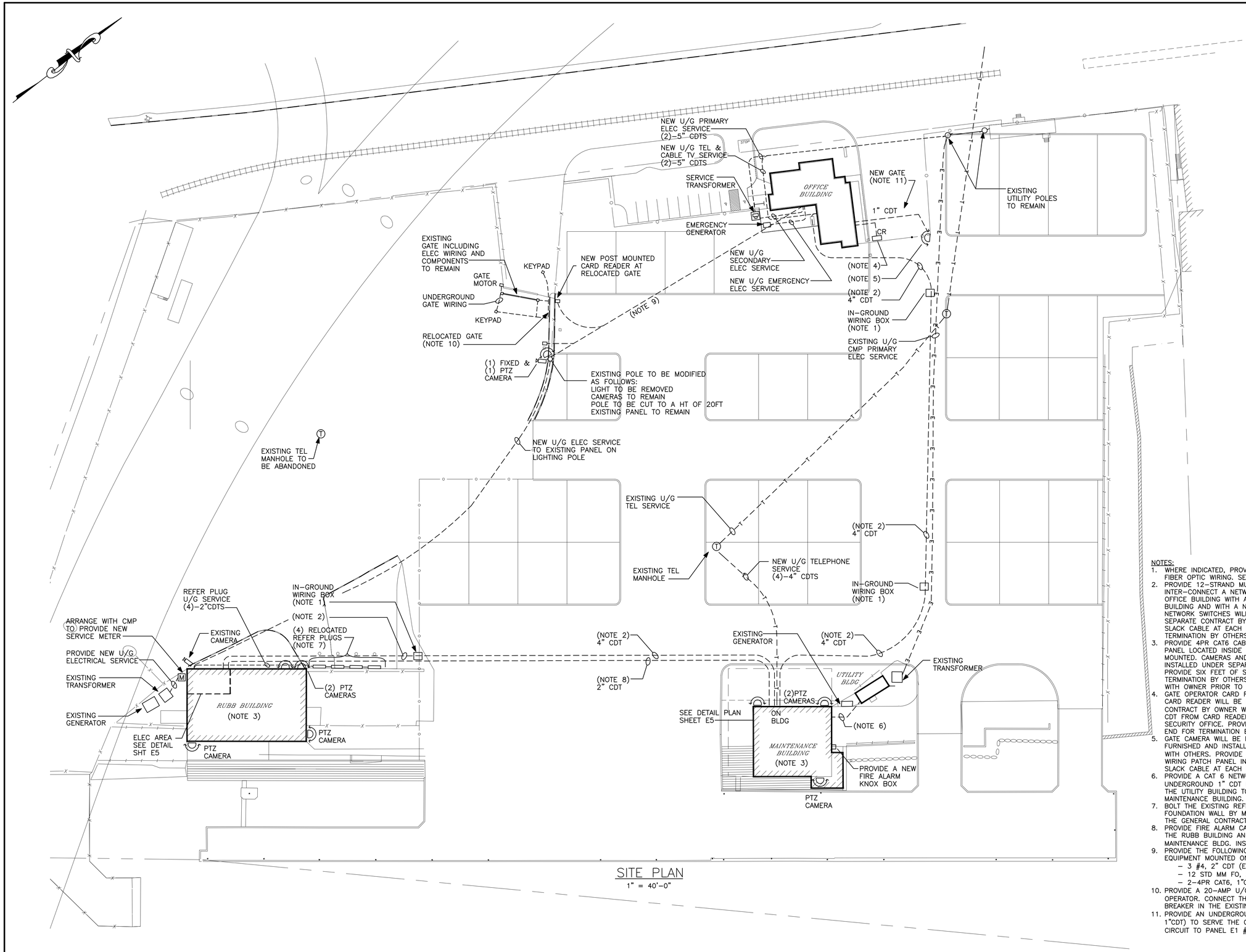

SITE PLAN
1" = 40'-0"

NOTES:

1. WHERE INDICATED, PROVIDE IN-GROUND WIRING BOX FOR NEW FIBER OPTIC WIRING. SEE SHEET E6 FOR DETAIL.
2. PROVIDE 12-STRAND MULTI-MODE FIBER OPTIC CABLE TO INTER-CONNECT A NETWORK SWITCH IN THE SERVER ROOM IN THE OFFICE BUILDING WITH A NETWORK SWITCH IN THE MAINTENANCE BUILDING AND WITH A NETWORK SWITCH IN THE RUBB BUILDING. NETWORK SWITCHES WILL BE FURNISHED AND INSTALLED UNDER SEPARATE CONTRACT BY OWNER WITH OTHER. PROVIDE SIX FEET OF SLACK CABLE AT EACH NETWORK SWITCH LOCATION FOR TERMINATION BY OTHERS.
3. PROVIDE 4PR CAT6 CABLE FROM EACH CAMERA TO A WIRING PATCH PANEL LOCATED INSIDE THE BUILDING TO WHICH THE CAMERA IS MOUNTED. CAMERAS AND PATCH PANELS WILL BE FURNISHED AND INSTALLED UNDER SEPARATE CONTRACT BY OWNER WITH OTHERS. PROVIDE SIX FEET OF SLACK CABLE AT EACH END FOR TERMINATION BY OTHERS. VERIFY EXACT LOCATION OF ALL CAMERAS WITH OWNER PRIOR TO ROUGH-IN.
4. GATE OPERATOR CARD READER WILL BE INSTALLED ON GATE POST. CARD READER WILL BE FURNISHED AND INSTALLED UNDER SEPARATE CONTRACT BY OWNER WITH OTHERS. PROVIDE 10/C #22 AWG IN 1" CDT FROM CARD READER TO DOOR ACCESS CONTROL PANEL IN SECURITY OFFICE. PROVIDE SIX FEET OF SLACK CABLE AT EACH END FOR TERMINATION BY OTHERS.
5. GATE CAMERA WILL BE INSTALLED ON GATE POST. CAMERA WILL BE FURNISHED AND INSTALLED UNDER SEPARATE CONTRACT BY OWNER WITH OTHERS. PROVIDE 4PR CAT6 1" CDT FROM CAMERA TO WIRING PATCH PANEL IN SERVER ROOM. PROVIDE SIX FEET OF SLACK CABLE AT EACH END FOR TERMINATION BY OTHERS.
6. PROVIDE A CAT 6 NETWORK CABLE TO BE RUN IN AN UNDERGROUND 1" CDT FROM THE LIGHTING CONTROL PANEL LC1 IN THE UTILITY BUILDING TO AN EXISTING NETWORK RACK IN THE MAINTENANCE BUILDING.
7. BOLT THE EXISTING REFER PLUGS TO THE EXISTING CONCRETE FOUNDATION WALL BY MEANS OF NEW STEEL ANGLES PROVIDED BY THE GENERAL CONTRACTOR.
8. PROVIDE FIRE ALARM CABLES BETWEEN NEW FIRE ALARM DEVICES IN THE RUBB BUILDING AND NEW FIRE ALARM CONTROL PANEL IN THE MAINTENANCE BLDG. INSTALL CABLE IN A 2" CDT.
9. PROVIDE THE FOLLOWING TO SERVE THE EXISTING AND NEW EQUIPMENT MOUNTED ON THE EXISTING POLE AT THE WEST FENCE:
   - 3 #4, 2" CDT (EXISTING PANEL FEEDER)
   - 12 STD MM FO, 2" CDT (TELECOM TRANSMITTER BY OTHERS)
   - 2-4PR CAT6, 1"CDT EA (CARD READERS)
10. PROVIDE A 20-AMP U/G CIRCUIT FOR THE RELOCATED GATE OPERATOR. CONNECT THE CIRCUIT TO A SPARE 20A/1P CIRCUIT BREAKER IN THE EXISTING PANEL AT THE WEST FENCE.
11. PROVIDE AN UNDERGROUND CIRCUIT (2 #12, 1 #12GND, IN A 1"CDT) TO SERVE THE GATE OPERATOR MOTOR. CONNECT THE CIRCUIT TO PANEL E1 #45.

STATE OF MAINE
DEPARTMENT OF TRANSPORTATION

PROJECT NUMBER 017820.00

PIN 017820.00

STATE OF MAINE
LAWRENCE E. BARTLETT
No. 7928
PROFESSIONAL ENGINEER

			Lawrence E. Bartlett
		DATE	SIGNATURE
		3/25/11	7928
		3/25/11	P.E. NUMBER
		-	03/25/11
		-	DATE
PROJ. MANAGER: CRAIG R. MORIN		BY	DATE
DESIGN-DETAILED	LEB	JLC	3/25/11
CHECKED-REVIEWED	LEB	LEB	3/25/11
DESIGN2-DETAILED2	-	-	-
DESIGN3-DETAILED3	-	-	-
REVISIONS 1	-	-	-
REVISIONS 2	-	-	-
REVISIONS 3	-	-	-
REVISIONS 4	-	-	-
FIELD CHANGES	-	-	-

PORTLAND INTERNATIONAL
MARINE TERMINAL IMPROVEMENTS
PORTLAND CUMBERLAND COUNTY

PROPOSED SITE ELECTRICAL

SHEET NUMBER
E2

Bartlett Design
LIGHTING & ELECTRICAL ENGINEERING
942 WASHINGTON STREET, BATH, ME 04530
TEL (207) 443-5447 FAX (207) 443-5560

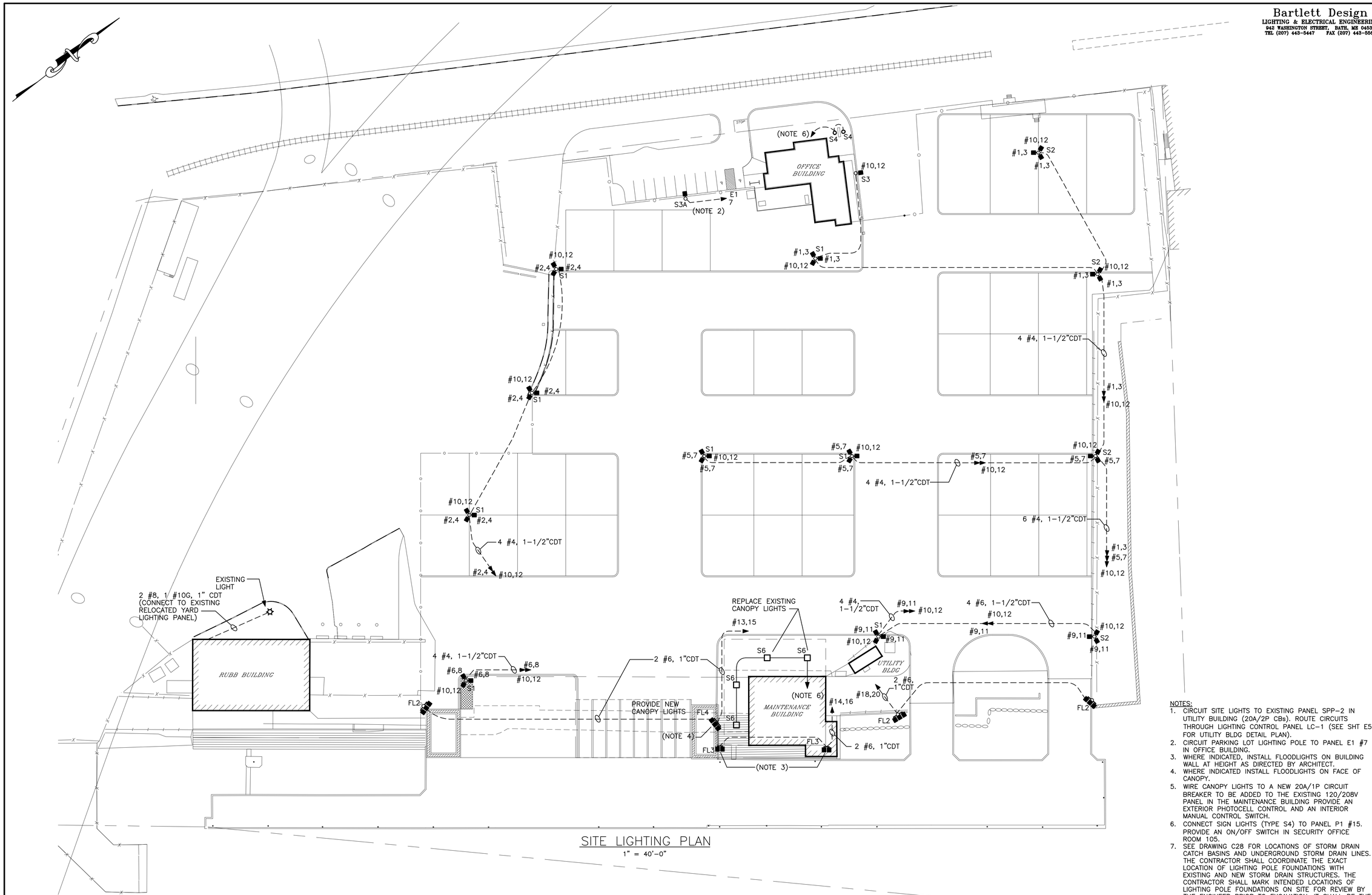

SITE LIGHTING PLAN
1" = 40'-0"

NOTES:
1. CIRCUIT SITE LIGHTS TO EXISTING PANEL SPP-2 IN UTILITY BUILDING (20A/2P CBs). ROUTE CIRCUITS THROUGH LIGHTING CONTROL PANEL LC-1 (SEE SHT E5 FOR UTILITY BLDG DETAIL PLAN).
2. CIRCUIT PARKING LOT LIGHTING POLE TO PANEL E1 #7 IN OFFICE BUILDING.
3. WHERE INDICATED, INSTALL FLOODLIGHTS ON BUILDING WALL AT HEIGHT AS DIRECTED BY ARCHITECT.
4. WHERE INDICATED INSTALL FLOODLIGHTS ON FACE OF CANOPY.
5. WIRE CANOPY LIGHTS TO A NEW 20A/1P CIRCUIT BREAKER TO BE ADDED TO THE EXISTING 120/208V PANEL IN THE MAINTENANCE BUILDING PROVIDE AN EXTERIOR PHOTOCELL CONTROL AND AN INTERIOR MANUAL CONTROL SWITCH.
6. CONNECT SIGN LIGHTS (TYPE S4) TO PANEL P1 #15. PROVIDE AN ON/OFF SWITCH IN SECURITY OFFICE ROOM 105.
7. SEE DRAWING C28 FOR LOCATIONS OF STORM DRAIN CATCH BASINS AND UNDERGROUND STORM DRAIN LINES. THE CONTRACTOR SHALL COORDINATE THE EXACT LOCATION OF LIGHTING POLE FOUNDATIONS WITH EXISTING AND NEW STORM DRAIN STRUCTURES. THE CONTRACTOR SHALL MARK INTENDED LOCATIONS OF LIGHTING POLE FOUNDATIONS ON SITE FOR REVIEW BY THE ENGINEER PRIOR TO EXCAVATION. IT SHALL BE THE CONTRACTOR'S RESPONSIBILITY TO DETERMINE EXACT LOCATIONS OF EXISTING UNDERGROUND UTILITY LINES.

STATE OF MAINE
DEPARTMENT OF TRANSPORTATION

PROJECT NUMBER 017820.00

PIN 017820.00

STATE OF MAINE
LAWRENCE E. BARTLETT
No. 7928
LICENSED
PROFESSIONAL ENGINEER

Lawrence E. Bartlett
SIGNATURE
7928
P.E. NUMBER
03/25/11
DATE

PROJ. MANAGER CRAIG R. MORIN		BY	DATE
DESIGN-DETAILED	LEB	JLC	3/25/11
CHECKED-REVIEWED	LEB	LEB	3/25/11
DESIGN2-DETAILED2	-	-	-
DESIGN3-DETAILED3	-	-	-
REVISIONS 1	-	-	-
REVISIONS 2	-	-	-
REVISIONS 3	-	-	-
REVISIONS 4	-	-	-
FIELD CHANGES	-	-	-

PORTLAND INTERNATIONAL
MARINE TERMINAL IMPROVEMENTS
PORTLAND CUMBERLAND COUNTY

PROPOSED SITE LIGHTING

SHEET NUMBER
E3

Bartlett Design
LIGHTING & ELECTRICAL ENGINEERING
942 WASHINGTON STREET, BATH, ME 04530
TEL (207) 443-5447 FAX (207) 443-5560

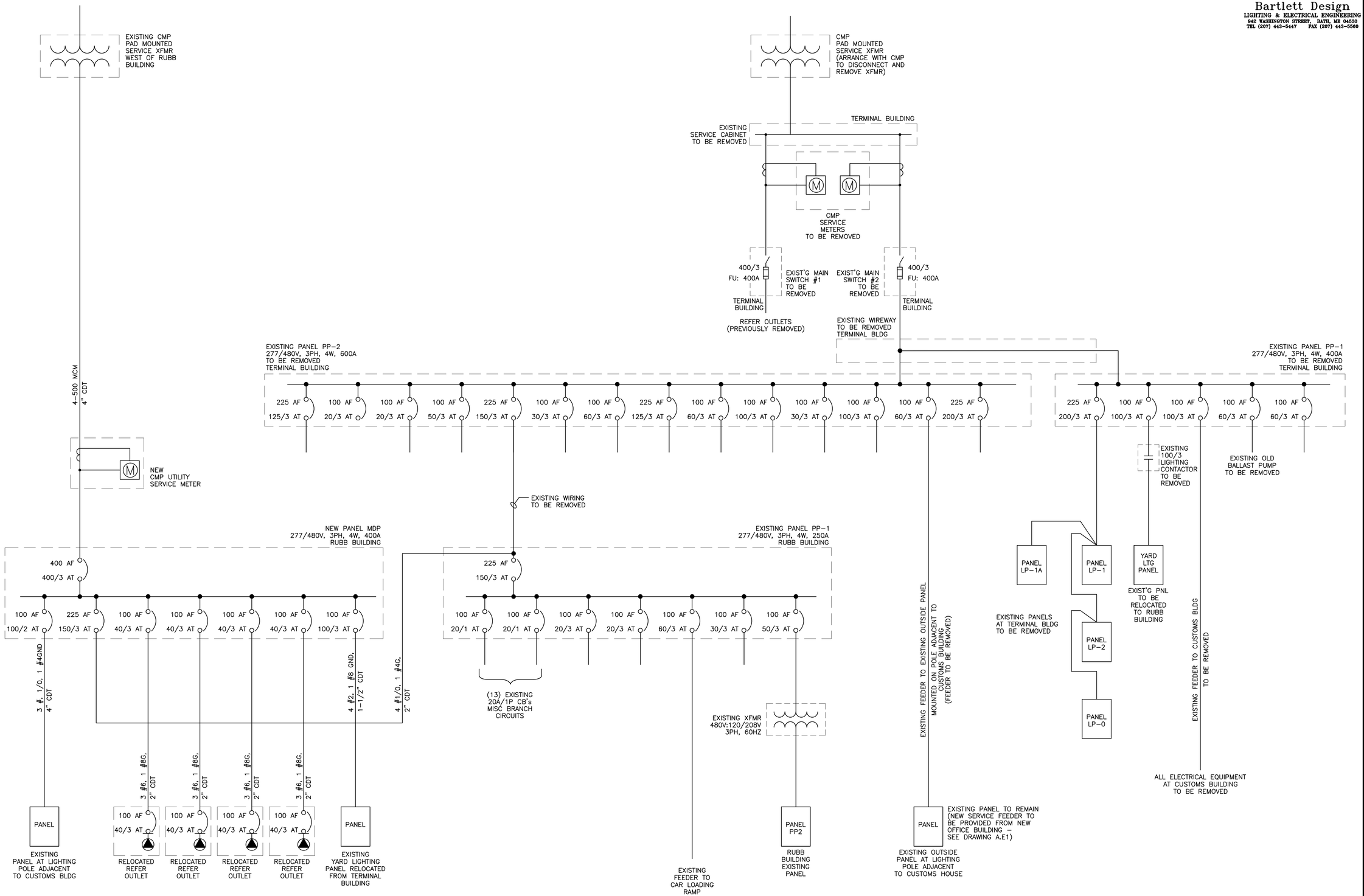

STATE OF MAINE
DEPARTMENT OF TRANSPORTATION

PROJECT NUMBER 017820.00

PIN 017820.00

STATE OF MAINE
LAWRENCE E. BARTLETT
No. 7928
LICENSED
PROFESSIONAL ENGINEER

		BY	DATE
PROJ. MANAGER	CRAIG R. MORIN		
DESIGN-DETAILED	LEB	JLC	3/25/11
CHECKED-REVIEWED	LEB	LEB	3/25/11
DESIGN2-DETAILED2	-	-	-
DESIGN3-DETAILED3	-	-	-
REVISIONS 1	-	-	-
REVISIONS 2	-	-	-
REVISIONS 3	-	-	-
REVISIONS 4	-	-	-
FIELD CHANGES	-	-	-

Lawrence E. Bartlett
SIGNATURE

7928
P.E. NUMBER

03/25/11
DATE

PORTLAND INTERNATIONAL
MARINE TERMINAL IMPROVEMENTS
PORTLAND CUMBERLAND COUNTY

ELEC. SINGLE LINE DIAGRAM

SHEET NUMBER

E4

Bartlett Design
LIGHTING & ELECTRICAL ENGINEERING
942 WASHINGTON STREET, BATH, ME 04530
TEL (207) 443-5447 FAX (207) 443-5560

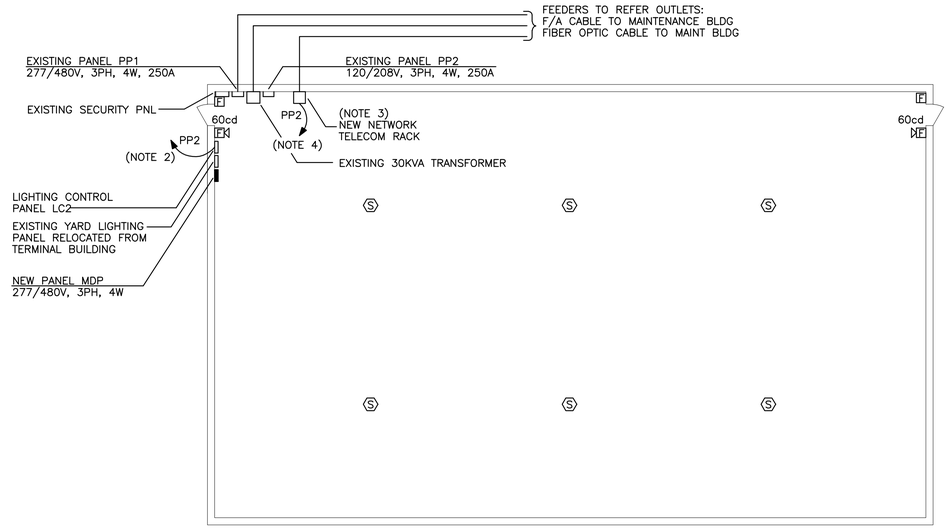

RUBB BUILDING

3/32" = 1'-0"

RUBB BUILDING NOTES:

1. PROVIDE NEW (REPLACEMENT) FIRE ALARM DEVICES AS SHOWN. CONNECT NEW FIRE ALARM DEVICES TO THE NEW FIRE ALARM CONTROL PANEL TO BE PROVIDED AT THE MAINTENANCE BUILDING.
2. PROVIDE A 20A/1P CB TO BE INSTALLED IN EXISTING PANEL PP2 FOR THE CIRCUIT SERVING LIGHTING CONTROL PANEL LC2.
3. PROVIDE A 20A/1P CB TO BE INSTALLED IN EXISTING PANEL PP2 FOR THE NEW NETWORK TELECOM RACK.
4. EXCEPT WHERE SPECIFICALLY NOTED OTHERWISE ALL ELECTRICAL WORK SHOWN IS EXISTING TO REMAIN.
5. ROUTE OUTSIDE POLE LIGHTING CIRCUITS THROUGH LIGHTING CONTROL PANEL LC2 TO RELOCATED YARD LIGHTING PANEL.
6. THE NETWORK RACK SHALL INCLUDE A 48-PORT CAT 5E PATCH PANEL AND A SURGE PROTECTED POWER STRIP.

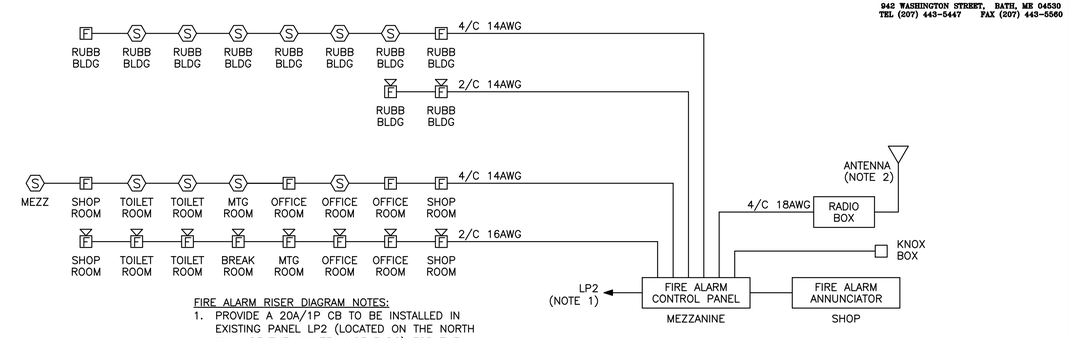

FIRE ALARM RISER DIAGRAM NOTES:

1. PROVIDE A 20A/1P CB TO BE INSTALLED IN EXISTING PANEL LP2 (LOCATED ON THE NORTH WALL OF THE MAINTENANCE BLDG) FOR THE NEW FIRE ALARM PANEL.
2. INSTALL FIRE ALARM RADIO TRANSMITTER BESIDE FIRE ALARM PANEL. EXTEND COMMUNICATIONS CABLE TO ANTENNA ON MAINTENANCE BUILDING ROOF.

MAINTENANCE/RUBB BUILDING FIRE ALARM RISER DIAGRAM

NOT TO SCALE

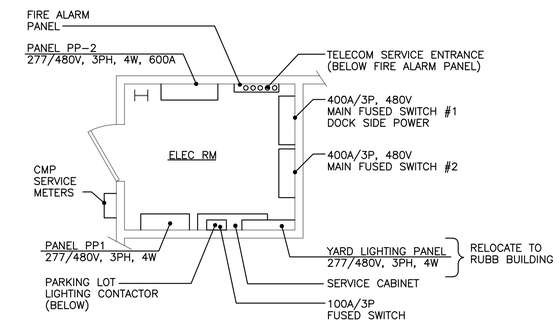

TERMINAL BUILDING ELEC RM

1/4" = 1'-0"

EXCEPT WHERE OTHERWISE NOTED, ALL EQUIPMENT SHOWN SHALL BE DISCONNECTED AND REMOVED.

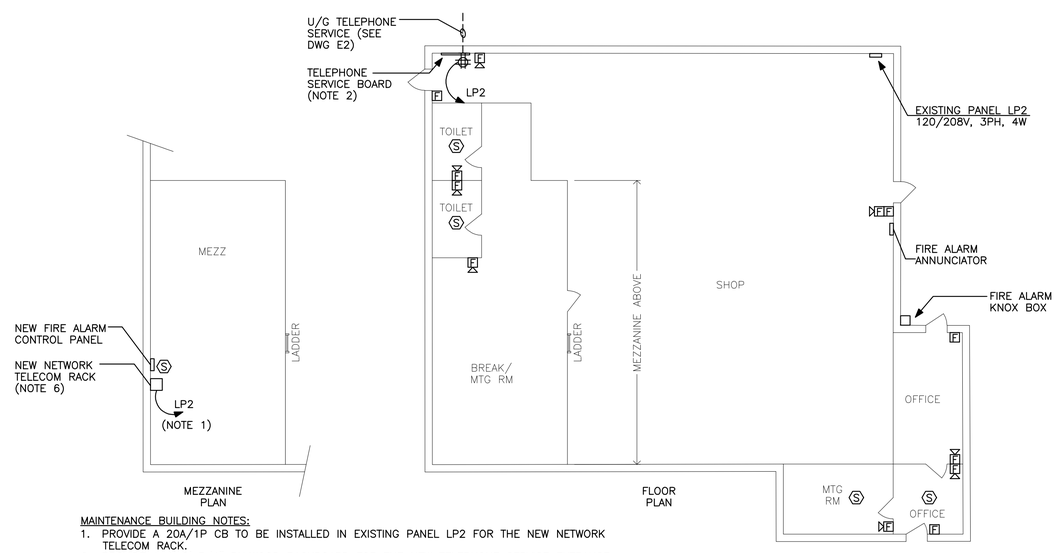

MAINTENANCE BUILDING NOTES:

1. PROVIDE A 20A/1P CB TO BE INSTALLED IN EXISTING PANEL LP2 FOR THE NEW NETWORK TELECOM RACK.
2. PROVIDE A 4'x8'x3/4" PLYWOOD BACKBOARD FOR THE NEW TELEPHONE SERVICE ENTRANCE. PROVIDE A 120V, 20A QUAD RECEPTACLE OUTLET TO BE CIRCUITED TO A NEW 20A/1P CB TO BE INSTALLED IN EXISTING PANEL LP2.
3. NEW CIRCUIT WIRING SHALL BE 2 #12, 1 #12GND, 3/4"CDT.
4. PROVIDE A 25-PAIR CAT 5E CABLE AND A 12-STRAND MULTI-PURPOSE FIBER-OPTIC CABLE BETWEEN THE NEW TELEPHONE SERVICE BOARD AND THE NEW NETWORK RACK AT THE MEZZANINE.
5. PROVIDE NEW 4PR CAT 5E NETWORK CABLE BETWEEN THE EXISTING NETWORK AND PHONE OUTLETS IN THE MEETING ROOM AND THE OFFICES TO THE NEW NETWORK RACK AT THE MEZZANINE.
6. THE NEW NETWORK RACK SHALL INCLUDE A 48-PORT PATCH PANEL, A SURGE PROTECTED POWER STRIP, AND A RACK MOUNTED UPS.
7. PROVIDE NEW (REPLACEMENT) FIRE ALARM DEVICES AS SHOWN. CONNECT NEW FIRE ALARM DEVICES TO THE NEW FIRE ALARM CONTROL PANEL.

MAINTENANCE BUILDING PLAN

3/32" = 1'-0"

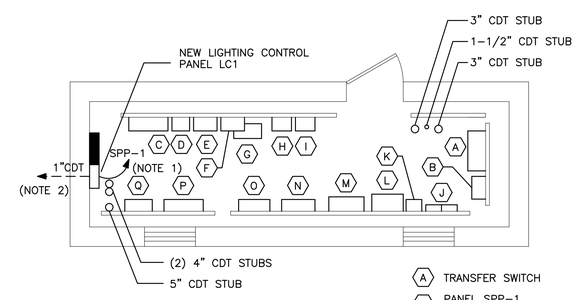

UTILITY BUILDING DETAIL

1/4" = 1'-0"

EXCEPT WHERE NOTED OTHERWISE, ALL ELECTRICAL EQUIPMENT SHOWN IS EXISTING TO REMAIN

UTILITY BUILDING NOTES:

1. CONNECT LIGHTING CONTROL PANEL LC1 TO A SPARE 20A/1P CB IN PANEL SPP-1
2. PROVIDE A CAT 6 NETWORK CONNECTION FOR THE LIGHTING CONTROL PANEL. EXTEND CABLE TO EXISTING NETWORK RACK IN MAINTENANCE BUILDING.

- A TRANSFER SWITCH
- B PANEL SPP-1 277/480V, 3PH, 4W, 225A
- C SERVICE BOX
- D SERVICE METER, PANEL PP1
- E SERVICE METER, TRUCK HEATER
- F 200A FUSED SWITCH TRUCK HEATER
- G TRANSFORMER
- H SERVICE METER, PANEL SPP-1
- I 200A FUSED SWITCH PANEL SPP-1
- J LIGHTING CONTACTORS 1 & 2
- K 200A FUSED SWITCH
- L 50KVA TRANSFORMER
- M PANEL PP2 277/480V, 3PH, 4W, 1200A
- N CT CABINET
- O SERVICE METER
- P PANEL PP1 277/480V, 3PH, 4W, 400A
- Q PANEL SPP-2 277/480V, 3PH, 4W

STATE OF MAINE
DEPARTMENT OF TRANSPORTATION

PROJECT NUMBER 017820.00

PIN 017820.00

STATE OF MAINE LAWRENCE E. BARTLETT No. 7928 LICENSED PROFESSIONAL ENGINEER

PROJ. MANAGER	CRAIG R. MORIN		
DESIGN-DETAILED	LEB	JLC	3/25/11
CHECKED-REVIEWED	LEB	LEB	3/25/11
DESIGN2-DETAILED2	-	-	-
DESIGN3-DETAILED3	-	-	-
REVISIONS 1	-	-	-
REVISIONS 2	-	-	-
REVISIONS 3	-	-	-
REVISIONS 4	-	-	-
FIELD CHANGES	-	-	-

Lawrence E. Bartlett
SIGNATURE

7928
P.E. NUMBER

03/25/11
DATE

PORTLAND INTERNATIONAL
MARINE TERMINAL IMPROVEMENTS
PORTLAND CUMBERLAND COUNTY

ELECTRICAL DETAILS - 1

SHEET NUMBER

E5

Bartlett Design
LIGHTING & ELECTRICAL ENGINEERING
942 WASHINGTON STREET, BATH, ME 04530
TEL (207) 443-5447 FAX (207) 443-5560

CABLE TV/TELEPHONE MANHOLE DETAIL NOTES:
1. CONCRETE: 4,000 PSI @ 28DAYS.
2. USE 32IN COVER AND FRAME MARKED ELEC OR COMM AS REQUIRED. MINIMUM ONE COURSE BRICK TO GRADE.
3. MOUNTINGS FOR CABLE RACKS ECT, CAST IN WALL BY FUTURE PLANS OR FIELD LOCATED.
4. SPLICE BOX SHALL BE SET ON A SUITABLE GRAVEL BASE.
5. REINFORCING: GRADE 60 REBAR:
   - REINFORCING PLACED IN CENTER IF CONCRETE SLAB, WALLS, & ROOF.
   - #4 @ 5IN O.C. VERTICAL IN WALLS, CANTILEVERED OVER TOP OF OPENING
   - #4 @ 8IN O.C. HORIZONTALLY IN WALLS
   - 4 PIECES #4 SURROUNDING OPENING
   - #4 @ 5IN O.C. EACH WAY ON TOP
6. MANHOLE FRAMES AND COVERS ARE TO BE MACHINED TO A SMOOTH FIT AND SHALL BE OF GRAY CAST IRON.
7. COVER SHALL HAVE DIAMOND TOP SURFACE.

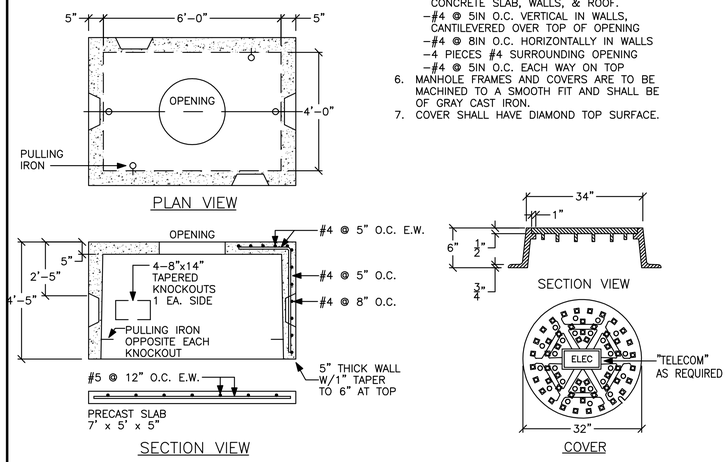

TELECOMMUNICATIONS WIRING BOX

NOT TO SCALE

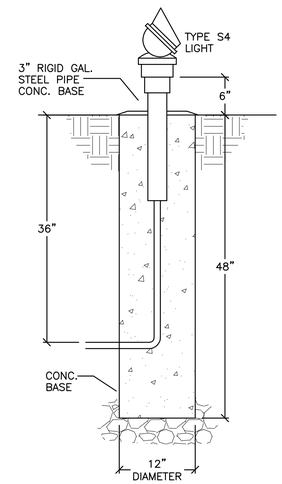

TYPE S4 FOUNDATION DETAIL

1" = 1'-0"

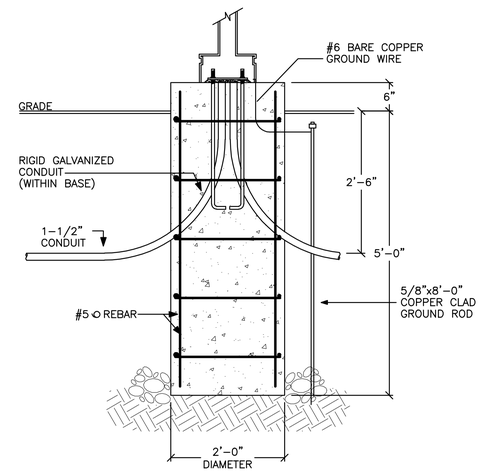

POLE FOUNDATION DETAIL – 3

3/4" = 1'-0"

TYPICAL FOR POLE TYPE S3

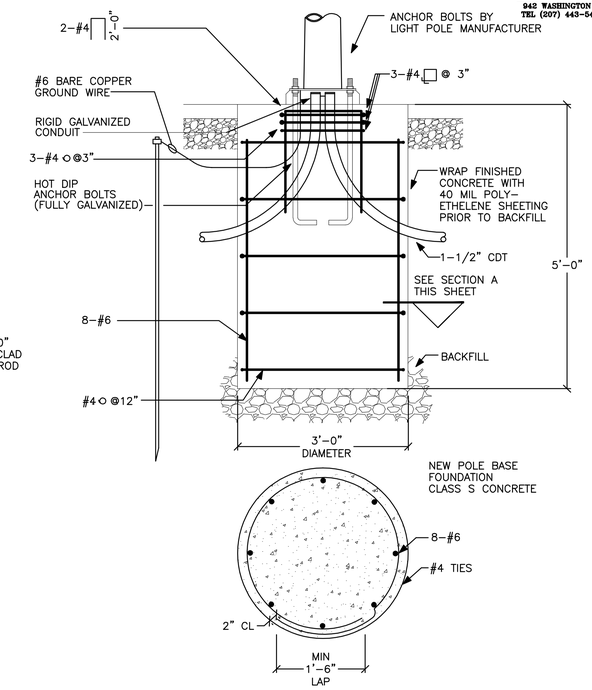

POLE FOUNDATION DETAIL – 2

NOT TO SCALE

TYPICAL FOR POLE TYPE FL4

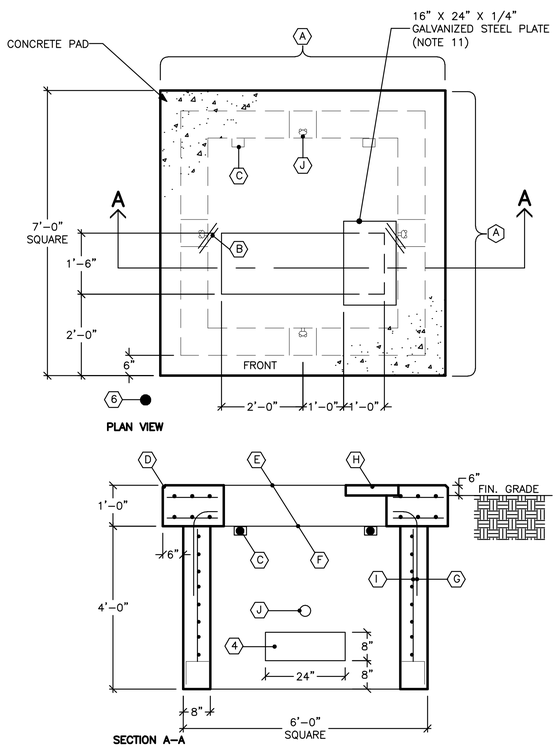

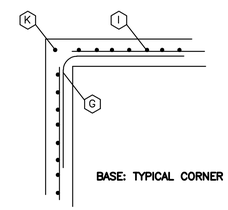

BASE: TYPICAL CORNER VIEW

TRANSFORMER PAD DETAIL NOTES:
1. "FRONT" DENOTES THE SIDE ON WHICH THE ACCESS DOORS ARE LOCATED. THE CONCRETE BASE SHALL BE SET ON A SUITABLE GRAVEL BASE AND LOCATED SO THE FRONT IS ACCESSIBLE BY TRUCK AND SUITABLY PROTECTED FROM PLOW AND TRAFFIC DAMAGE.
2. BEFORE INSTALLING OR REQUIRING ANY ACTIVE DRAINAGE STRUCTURE (EG. DRAIN PIPE) INTO THE FOUNDATION OR PAD, THE CONTRACTOR, CMP LINE SUPERVISOR, OR CMP DISTRIBUTION ENGINEER MUST CONTACT CENTRAL MAINE POWER COMPANY'S ENVIRONMENTAL SERVICES DEPARTMENT AT 623-3521 EXT 3479 TO REQUEST A SITE INSPECTION.
3. FINISH GRADE SHALL BE GRADED IN SUCH A MANNER TO ALLOW SURFACE WATER TO FLOW AWAY FROM THE PAD.
4. PROVIDE 8" X 24" CABLE HOLES (BOND OUTS) 8" UP THE WALL FROM THE BASE. LOCATE ONE CABLE HOLE PER WALL, MORE IF NECESSARY. LINE UP CABLE HOLES WITH TRENCH.
5. CONDUITS ENTERING CONCRETE STRUCTURES SHALL BE SET BACK FROM THE INSIDE WALL 1 TO 2 INCHES AND THE SPACE WITHIN THE KNOCKOUT SURROUNDING THE CONDUITS COMPLETELY FILLED WITH MORTAR TO PREVENT SOIL FROM ENTERING STRUCTURE. INSIDE THE STRUCTURE THE MORTAR SHALL BE FINISHED AND BEVELED FROM THE CONDUIT ENDS TO THE INSIDE WALL FACE TO COVER AND SMOOTH THE EDGES OF THE KNOCKOUTS.
6. A 3/4" X 8'-0" GALVANIZED GROUND ROD IS TO BE INSTALLED SIX INCHES IN FRONT OF THE FRONT CORNER OF THE FOUNDATION. THE TOP OF THE GROUND IS TO BE 6" BELOW FINAL GRADE.
7. A GROUND WIRE SHALL BE INSTALLED FROM THE GROUND ROD THROUGH THE CABLE HOLE AT THE BOTTOM OF THE PAD. 10 FEET OF GROUND WIRE SHALL BE PROVIDED SO THAT IT CAN BE INSTALLED THROUGH THE TWO GROUNDING LUGS AND CONNECTED TO THE NEUTRAL SPADE.
8. CONCRETE COMPRESSION STRENGTH SHALL BE 4000 PSI @ 28 DAYS. FOR CAST IN PLACE EARLY HIGH STRENGTH MAY BE USED WITH A MINIMUM OF SEVEN DAY CURE TIME.
9. REINFORCING STEEL TO HAVE: FY = 60 KSI.
10. FOR PRECAST UNITS: THE PRECAST SUPPLIER SHALL PROVIDE LIFTING LUGS IN THE SLAB (FOUNDATION) AND BASE; THE PRECAST SUPPLIER SHALL ASSEMBLE THE SLAB TO THE BASE PRIOR TO SHIPPING TO THE SITE TO ENSURE THAT THE SLAB AND THE BASE FIT PROPERLY (WITH NO ROCKING OF THE SLAB EVIDENT).
11. 1 16" X 24" X 1/4" GALVANIZED STEEL PLATE TO COVER A PORTION OF THE CABLE HOLE WHEN THE TRANSFORMER DOES NOT COMPLETELY COVER IT. CUT THE STEEL PLATE TO FIT IF NECESSARY.

A. 7-#5 REBAR EVENLY SPACED EACH WAY TOP TO BOTTOM
B. 2-#4 CORNER DIAGONAL REBAR 2'-0" LONG TOP AND BOTTOM
C. 4" X 4" X 1/2" ANGLE 6" LONG WITH 2-3/4" DIAMETER EXPANSION ANCHORS TYPICAL – 4 PLACES (TWO PIECE PRECAST ONLY)
D. CHAMFER TYPICAL
E. 2" CONCRETE COVER OVER TOP REBAR
F. 3" CONCRETE COVER OVER BOTTOM REBAR
G. #5 L-BAR @ 12" (CAST IN PLACE ONLY)
H. 16" X 24" X 1/4" GALVANIZED STEEL PLATE. MID #6000621790
I. #5 REBAR ON 12" CENTERS
J. PULLING EYE INSERT, FOR USE WITH 3/4" NATIONAL COURSE THREAD EYE-BOLT, (RICHMOND LCB-1 OR EQUIVALENT). LOCATED OPPOSITE EACH CABLE HOLE AND 2 FEET FROM THE BOTTOM.
K. ALL REBAR ENDS TO BE COVERED BY 1" OF CONCRETE MINIMUM.

THREE PHASE TRANSFORMER PAD DETAIL 7FT SQ.

NOT TO SCALE

NOTE: TOP NOT TO BE TORQUED TO PRODUCE 60% YIELD STRESS OF ANCHOR BOLT

NOTE: DO NOT GROUT BETWEEN BOTTOM OF BASE PLATE AND TOP OF CONCRETE FOUNDATION

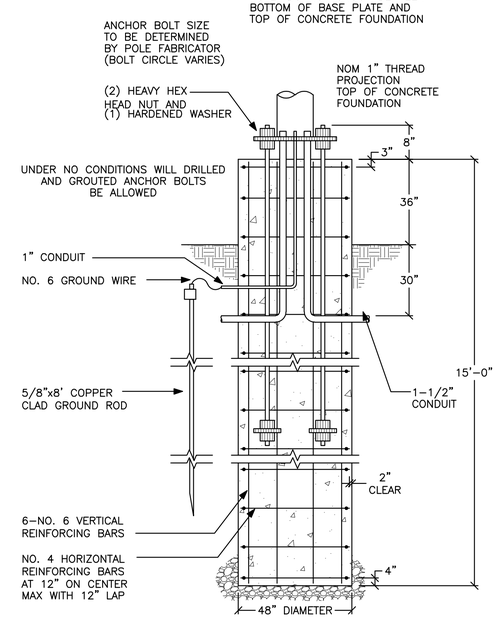

POLE FOUNDATION DETAIL – 1

3/8" = 1'-0"

TYPICAL FOR POLE TYPES S1 & S2

STATE OF MAINE
DEPARTMENT OF TRANSPORTATION

PROJECT NUMBER 017820.00

PIN 017820.00

STATE OF MAINE LAWRENCE E. BARTLETT No. 7928 PROFESSIONAL ENGINEER

Lawrence E. Bartlett

SIGNATURE		
7928	P.E. NUMBER	-
03/25/11	DATE	-
-	-	-
-	-	-

PROJ. MANAGER CRAIG R. MORIN	BY	DATE
DESIGN-DETAILED	JLC	3/25/11
CHECKED-REVIEWED	LEB	3/25/11
DESIGN2-DETAILED2	-	-
DESIGN3-DETAILED3	-	-
REVISIONS 1	-	-
REVISIONS 2	-	-
REVISIONS 3	-	-
REVISIONS 4	-	-
FIELD CHANGES	-	-

PORTLAND INTERNATIONAL MARINE TERMINAL IMPROVEMENTS
PORTLAND CUMBERLAND COUNTY

ELECTRICAL DETAILS - 2

SHEET NUMBER

E6

LEGEND

X.X	Indicates window number. Refer to Window Schedule on A.A8.
x	Indicates partition type. Refer to A.A10 for details.
XXX.X	Indicates door number. Refer to Door Schedule on A.A9.
F.E.	Indicates Fire Extinguisher. Provide blocking.
	Fire Extinguishers shall be semi-recessed cabinets except in Mechanical Room 120 where it shall be mounted on wall brackets.
	Number and final location of fire extinguishers shall be reviewed and approved by Portland Fire Department before installation.
	Indicates built-in cabinets / millwork
	Indicates interior bearing wall
MAT / CONC-1	Indicates floor finish transition
CONC-1	Stained & sealed decorative concrete floor
CONC-2	Sealed concrete floor
CPT	Carpet
MAT	Entry Carpet
CT	Ceramic Tile
VCT	Conductive vinyl composition tile

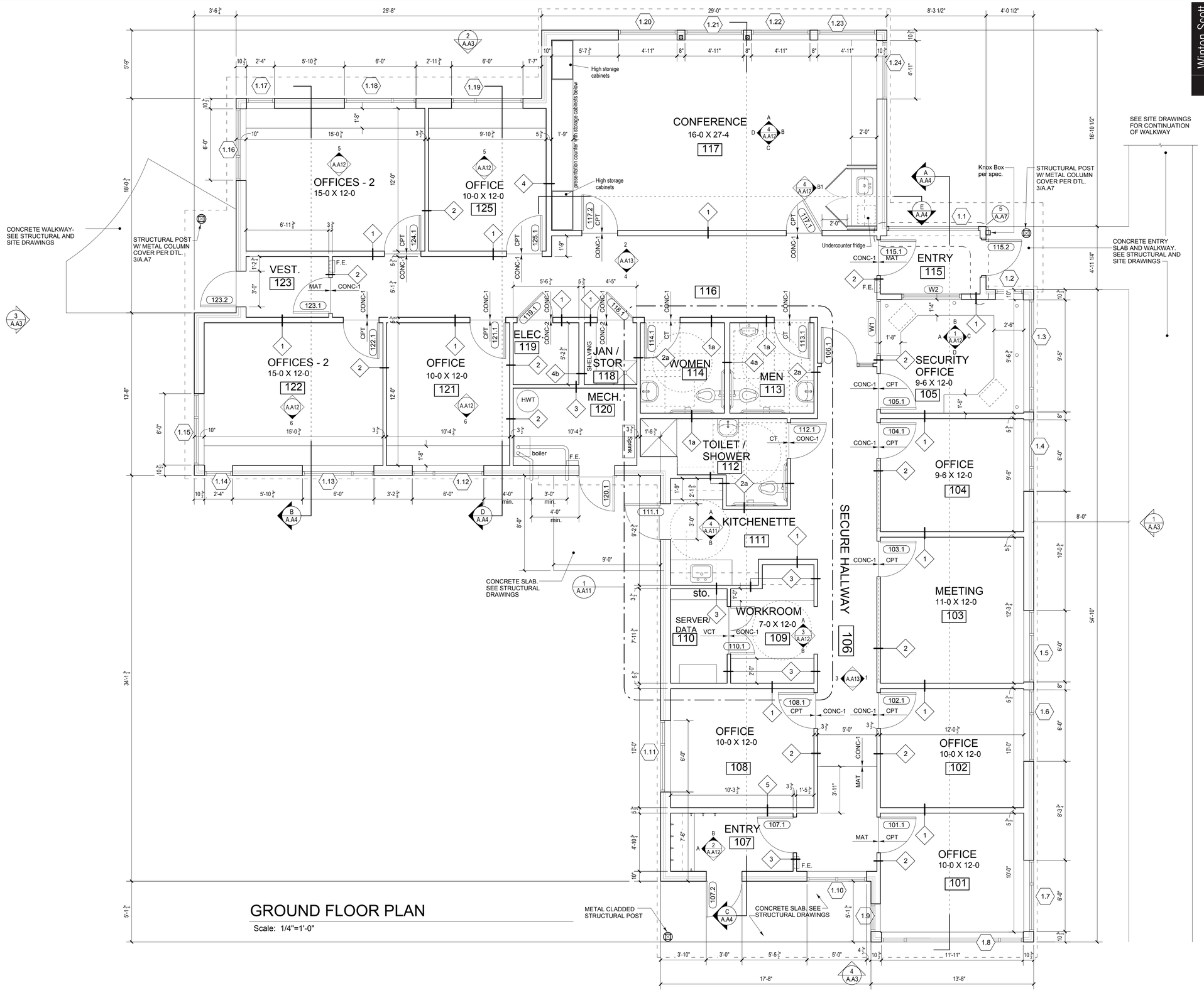

GROUND FLOOR PLAN

Scale: 1/4"=1'-0"

Winton Scott Architects

STATE OF MAINE
DEPARTMENT OF TRANSPORTATION

PROJECT NUMBER 01782.00

PIN 017820.00

	BY	DATE
PROJ. MANAGER	CRAIG MORIN	
DESIGN-DETAILED	ML	3/25/11
CHECKED-REVIEWED	SWW	
DESIGN2-DETAILED2		
DESIGN3-DETAILED3		
REVISIONS 1		
REVISIONS 2		
REVISIONS 3		
REVISIONS 4		
FIELD CHANGES		

SIGNATURE

P.E. NUMBER #793

DATE 3/25/11

PORTLAND INTERNATIONAL MARINE TERMINAL IMPROVEMENTS
PORTLAND CUMBERLAND COUNTY

BUILDING FLOOR PLANS

SHEET NUMBER

A.A1

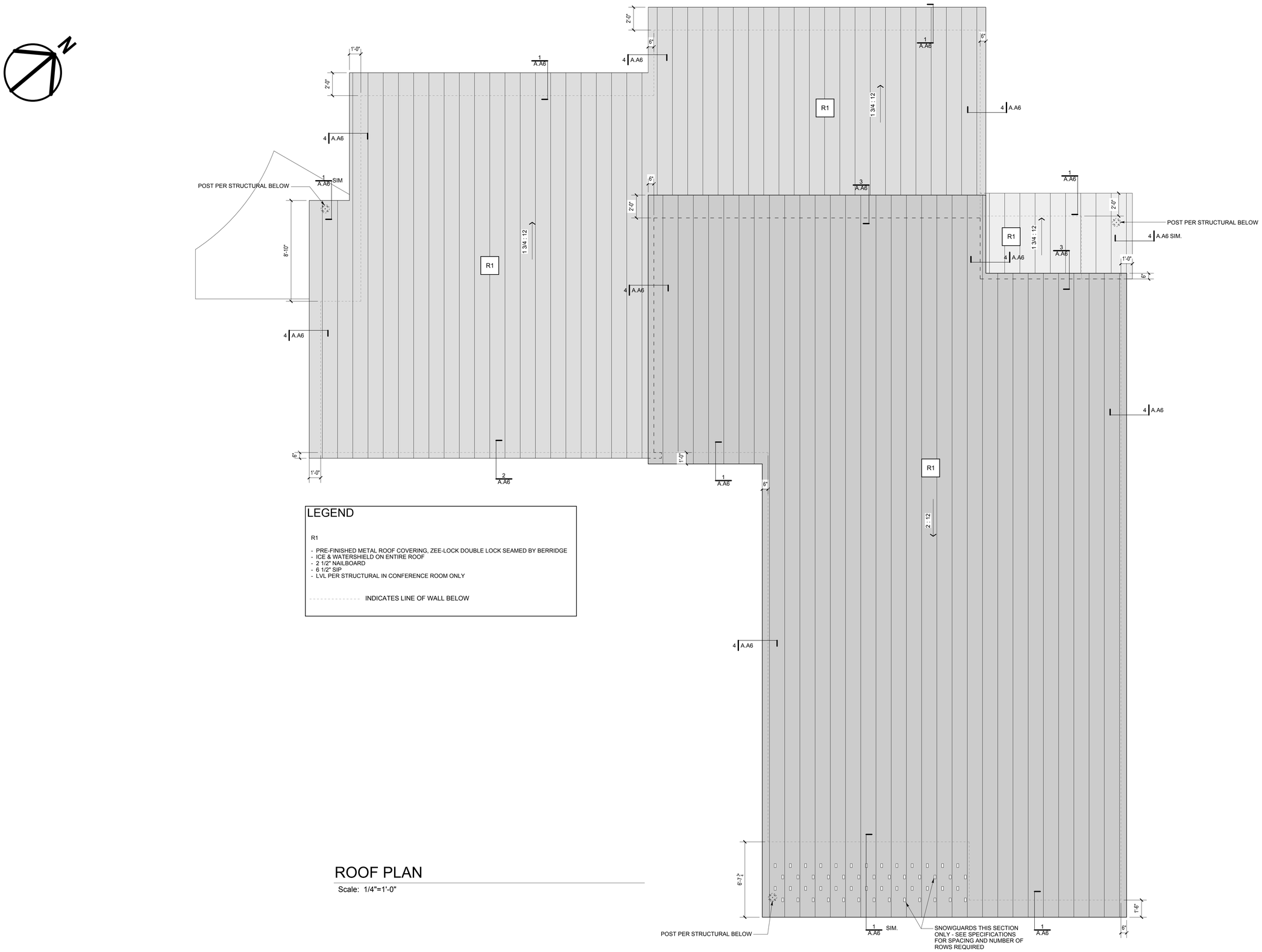

LEGEND

R1

- PRE-FINISHED METAL ROOF COVERING, ZEE-LOCK DOUBLE LOCK SEAMED BY BERRIDGE
- ICE & WATERSHIELD ON ENTIRE ROOF
- 2 1/2" NAILBOARD
- 6 1/2" SIP
- LVL PER STRUCTURAL IN CONFERENCE ROOM ONLY

- - - - - - - - - - - - - - INDICATES LINE OF WALL BELOW

ROOF PLAN

Scale: 1/4"=1'-0"

Winton Scott Architects

STATE OF MAINE
DEPARTMENT OF TRANSPORTATION

PROJECT NUMBER 01782.00

PIN 017820.00

		BY	DATE
PROJ. MANAGER	CRAIG MORIN		
DESIGN-DETAILED	- MIL	-	3/25/11
CHECKED-REVIEWED	- SWW	-	-
DESIGN2-DETAILED2	-	-	-
DESIGN3-DETAILED3	-	-	-
REVISIONS 1	-	-	-
REVISIONS 2	-	-	-
REVISIONS 3	-	-	-
REVISIONS 4	-	-	-
FIELD CHANGES	-	-	-

SIGNATURE

P.E. NUMBER #793

DATE 3/25/11

PORTLAND INTERNATIONAL
MARINE TERMINAL IMPROVEMENTS
PORTLAND CUMBERLAND COUNTY

BUILDING ROOF PLAN

SHEET NUMBER

A.A2

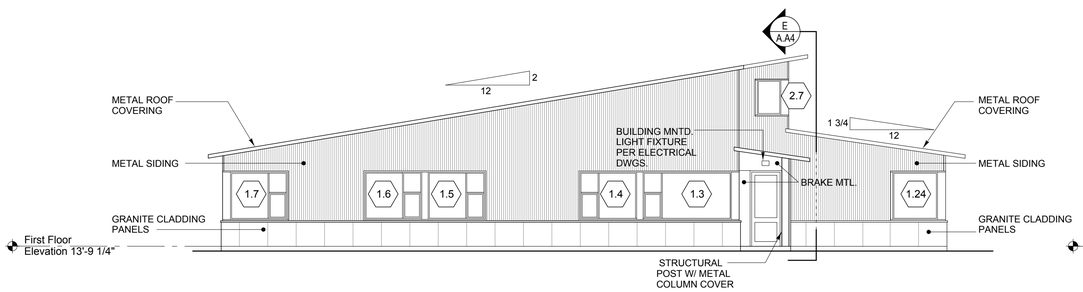

1 EAST ELEVATION

SCALE: 1/8" = 1'-0"

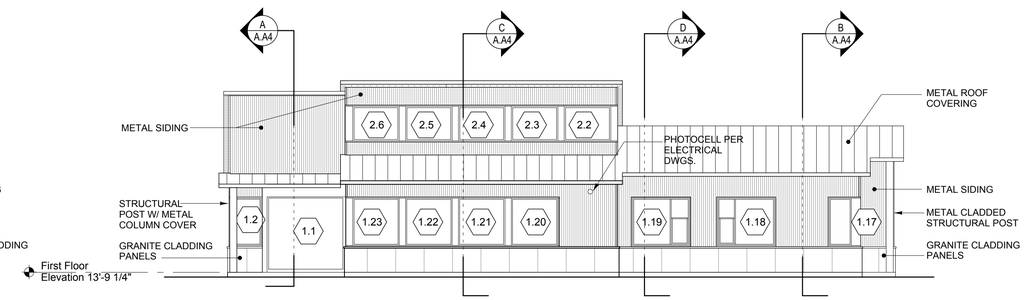

2 NORTH ELEVATION

SCALE: 1/8" = 1'-0"

NOTE:

COORDINATE CONDENSATE DRAIN PENETRATIONS THROUGH GRANITE PANELS. SEE MECHANICAL DRAWINGS.

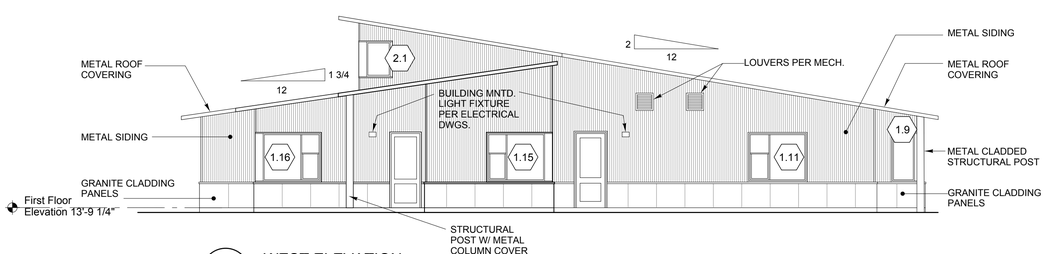

3 WEST ELEVATION

SCALE: 1/8" = 1'-0"

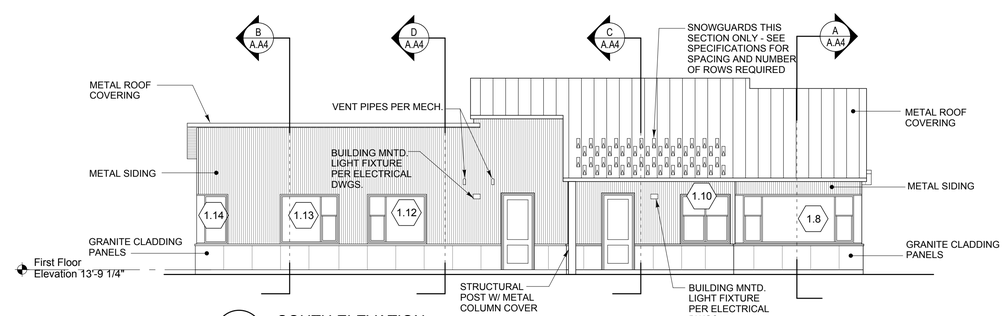

4 SOUTH ELEVATION

SCALE: 1/8" = 1'-0"

Winton Scott Architects

STATE OF MAINE
DEPARTMENT OF TRANSPORTATION

PROJECT NUMBER 01782.00

PIN 017820.00

		BY	DATE
PROJ. MANAGER	CRAIG MORIN		
DESIGN-DETAILED	ML	-	3/25/11
CHECKED-REVIEWED	SWW	-	-
DESIGN2-DETAILED2		-	-
DESIGN3-DETAILED3		-	-
REVISIONS 1		-	-
REVISIONS 2		-	-
REVISIONS 3		-	-
REVISIONS 4		-	-
FIELD CHANGES		-	-

SIGNATURE

P.E. NUMBER #793

DATE 3/25/11

PORTLAND INTERNATIONAL MARINE TERMINAL IMPROVEMENTS
PORTLAND CUMBERLAND COUNTY

BUILDING ELEVATIONS

SHEET NUMBER

A.A3

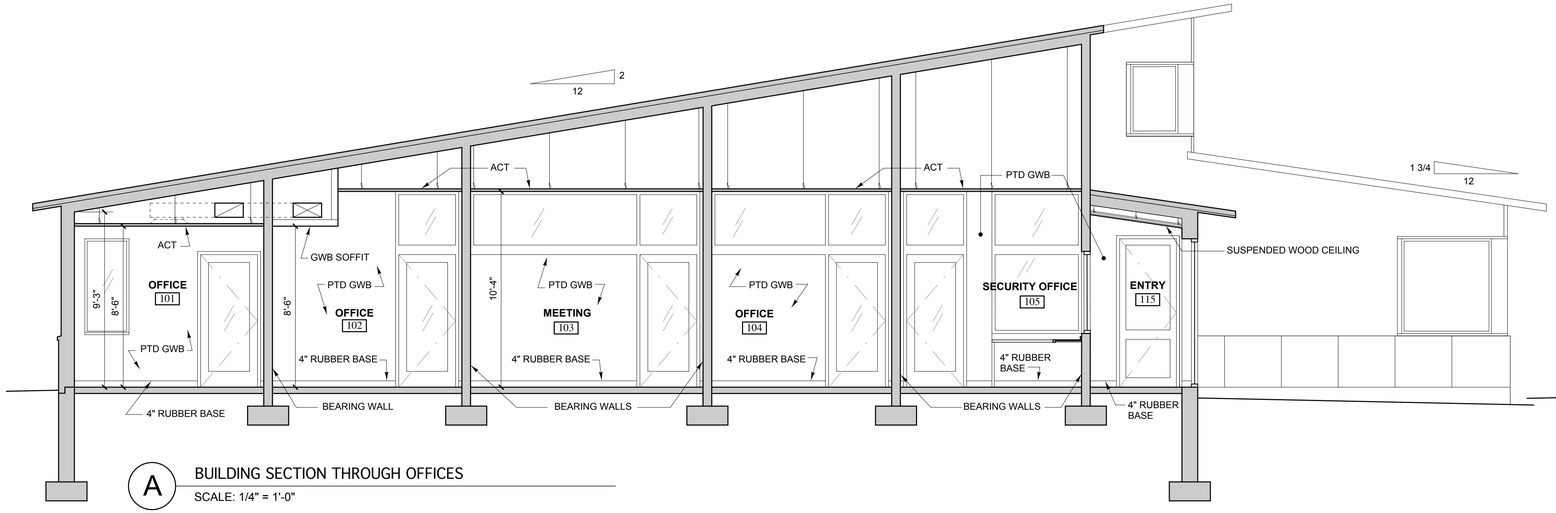

A BUILDING SECTION THROUGH OFFICES
SCALE: 1/4" = 1'-0"

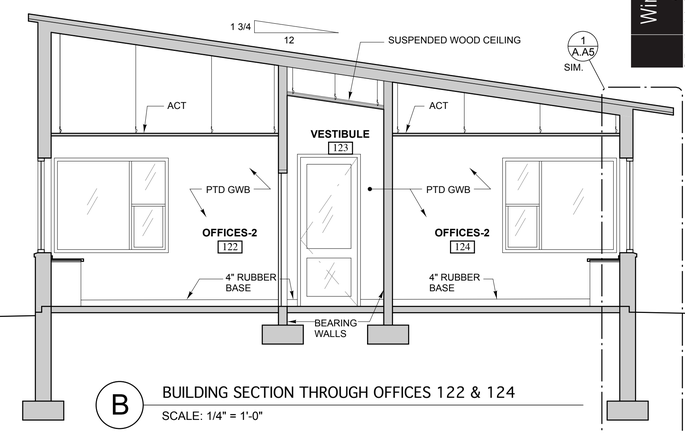

B BUILDING SECTION THROUGH OFFICES 122 & 124
SCALE: 1/4" = 1'-0"

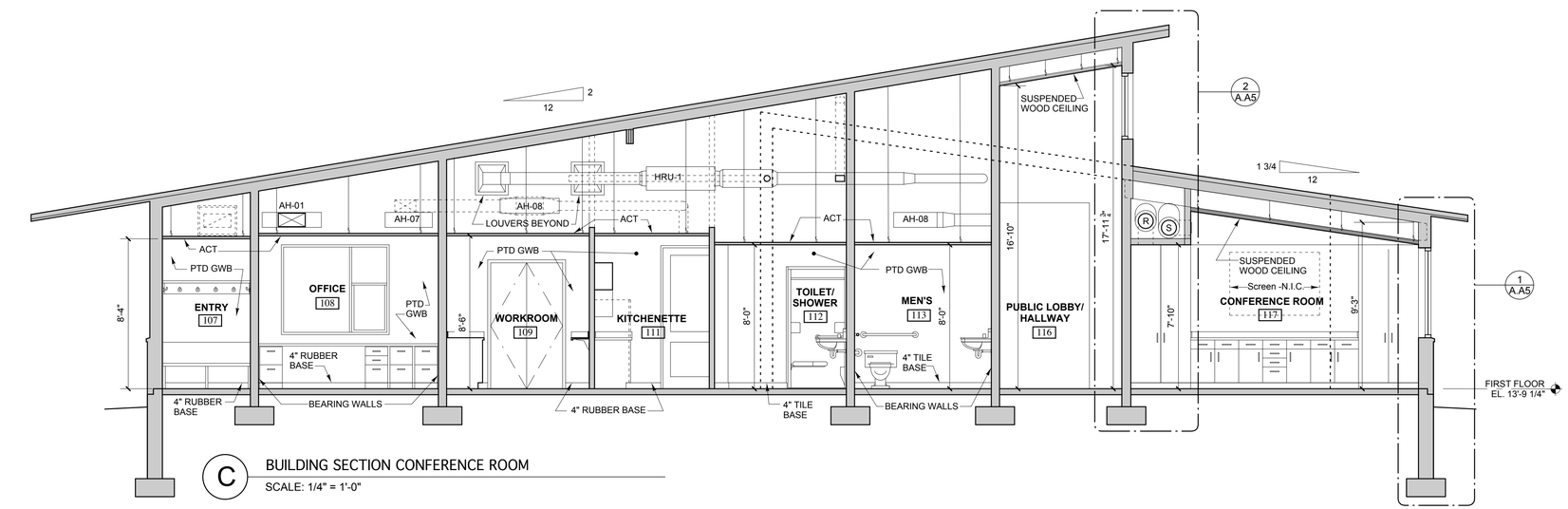

C BUILDING SECTION CONFERENCE ROOM
SCALE: 1/4" = 1'-0"

NOTE: SOME MECHANICAL EQUIPMENT AND DUCTWORK ARE SHOWN FOR COORDINATION PURPOSES. REFER TO MECHANICAL DRAWINGS FOR COMPLETE LAYOUT AND DETAILS.

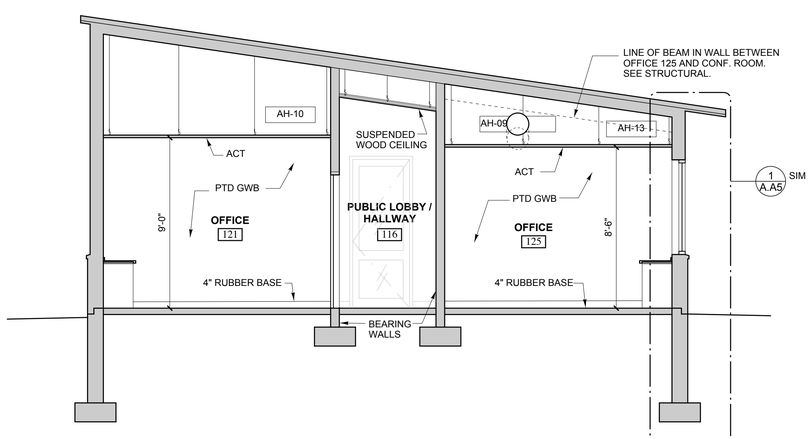

D BUILDING SECTION THROUGH OFFICES 121 & 125
SCALE: 1/4" = 1'-0"

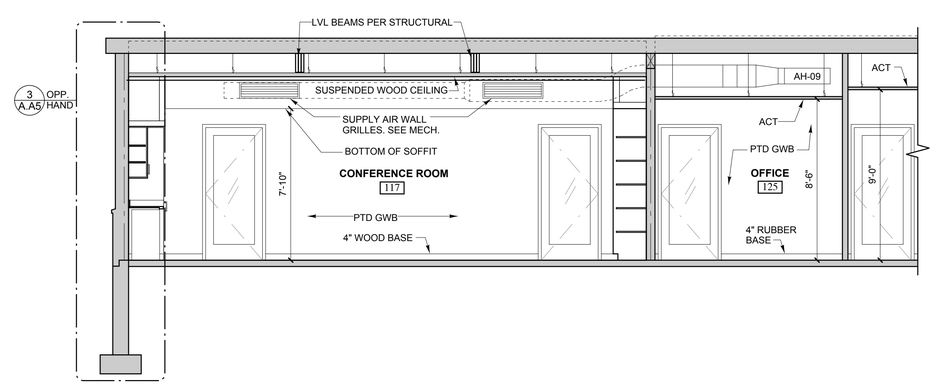

E BUILDING SECTION THROUGH CONFERENCE ROOM 117 & OFFICE 125
SCALE: 1/4" = 1'-0"

Winton Scott Architects

STATE OF MAINE
DEPARTMENT OF TRANSPORTATION

PROJECT NUMBER 01782.00

PIN 017820.00

		BY	DATE
PROJ. MANAGER	CRAIG MORIN		
DESIGN-DETAILED	- ML	-	3/25/11
CHECKED-REVIEWED	- SWW	-	-
DESIGN2-DETAILED2	-	-	-
DESIGN3-DETAILED3	-	-	-
REVISIONS 1	-	-	-
REVISIONS 2	-	-	-
REVISIONS 3	-	-	-
REVISIONS 4	-	-	-
FIELD CHANGES	-	-	-

SIGNATURE

P.E. NUMBER #793

DATE 3/25/11

PORTLAND INTERNATIONAL
MARINE TERMINAL IMPROVEMENTS
PORTLAND CUMBERLAND COUNTY

BUILDING SECTIONS

SHEET NUMBER
A.A4

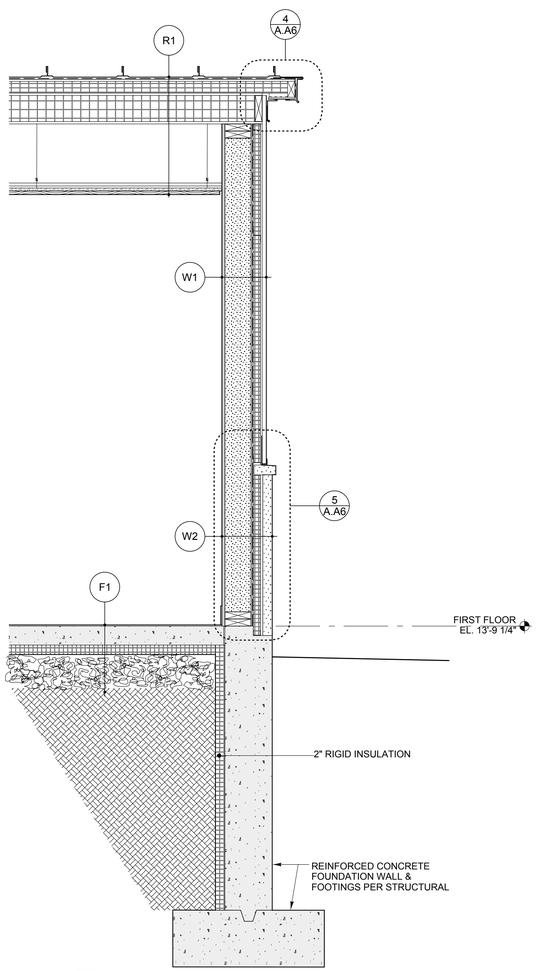

3 WALL SECTION AT ROOF RAKE

SCALE: 3/4" = 1'-0"

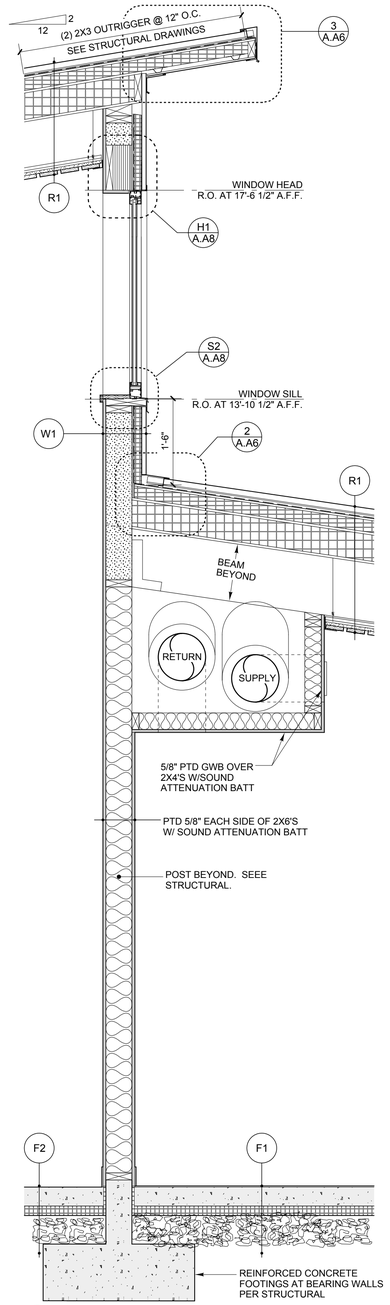

2 WALL SECTION AT HIGH WINDOWS

SCALE: 3/4" = 1'-0"

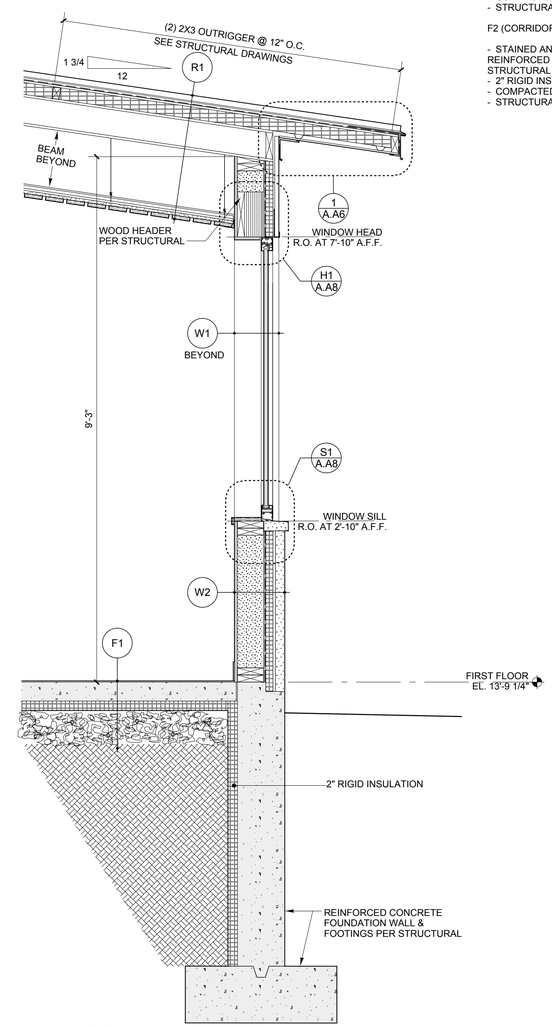

1 WALL SECTION AT LOW ROOF END

SCALE: 3/4" = 1'-0"

R1

- PRE-FINISHED METAL ROOF COVERING, ZEE-LOCK DOUBLE LOCK SEAMED BY BERRIDGE
- ICE & WATERSHIELD ON ENTIRE ROOF
- 2 1/2" NAILBOARD
- 6 1/2" SIP
- LVL PER STRUCTURAL IN CONFERENCE ROOM ONLY
- CEILING TYPE PER REFLECTED CEILING PLAN. SEE A.A14

W1

- 5/8" PAINTED GWB
- 2X6 WOOD STUDS WITH DENSEPAK CELLULOSE (R3.7 X 3.5" = R12.95)
- 1/2" PLYWOOD SHEATHING
- AIR AND WATER INFILTRATION BARRIER
- 1 1/2" FOIL FACED POLYISO RIGID INSULATION W/ TAPED SEAMS (R7.2) & "ZEE" GIRTS AT 48" O.C. HORIZONTALLY.
- PRE-FINISHED METAL SIDING HR-16 BY BERRIDGE RIBS INSTALLED VERTICALLY

W2

- 5/8" PAINTED GWB
- 2X6 WOOD STUDS WITH DENSEPAK CELLULOSE (R3.7 X 3.5" = R12.95)
- 1/2" PLYWOOD SHEATHING
- AIR AND WATER INFILTRATION BARRIER
- 1 1/2" FOIL FACED POLYISO RIGID INSULATION W/ TAPED SEAMS (R7.2) & "ZEE" GIRTS AT 48" O.C. HORIZONTALLY
- 1/2" SPACE
- 2" THICK GRANITE CLADDING PANELS & GRANITE CAP W/ STAINLESS STEEL STRAP ANCHORS

F1

- FLOOR FINISH PER SCHEDULE
- REINFORCED CONCRETE SLAB ON GRADE PER STRUCTURAL
- 2" RIGID INSULATION
- COMPACTED GRAVEL
- STRUCTURAL FILL

F2 (CORRIDORS)

- STAINED AND SEALED DECORATIVE REINFORCED CONCRETE SLAB ON GRADE PER STRUCTURAL
- 2" RIGID INSULATION
- COMPACTED GRAVEL
- STRUCTURAL FILL

Winton Scott Architects

STATE OF MAINE
DEPARTMENT OF TRANSPORTATION

PROJECT NUMBER 01782.00

PIN
017820.00

REGISTERED ARCHITECT WINTON R. SCOTT, JR. No. 793 STATE OF MAINE

		BY	DATE
PROJ. MANAGER	PAUL POTTLE		
DESIGN-DETAILED	MIL	-	3/25/11
CHECKED-REVIEWED	SWW	-	-
DESIGN2-DETAILED2		-	-
DESIGN3-DETAILED3		-	-
REVISIONS 1		-	-
REVISIONS 2		-	-
REVISIONS 3		-	-
REVISIONS 4		-	-
FIELD CHANGES		-	-

SIGNATURE

P.E. NUMBER
#793

DATE
3/25/11

PORTLAND INTERNATIONAL
MARINE TERMINAL IMPROVEMENTS
PORTLAND CUMBERLAND COUNTY

WALL SECTIONS

SHEET NUMBER

A.A5

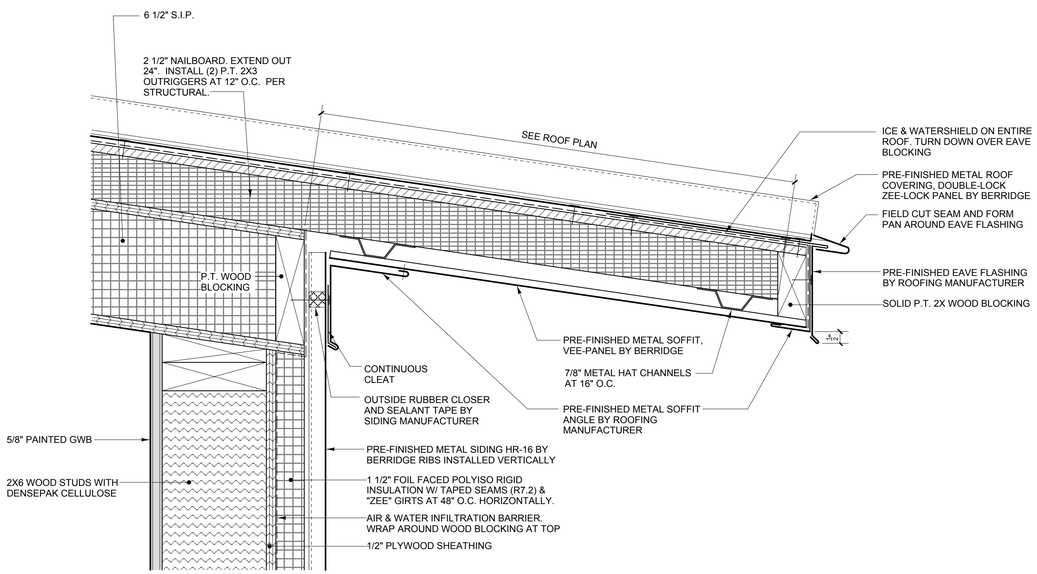

1 ROOF DETAIL AT LOW OVERHANG

SCALE: 3" = 1'-0"

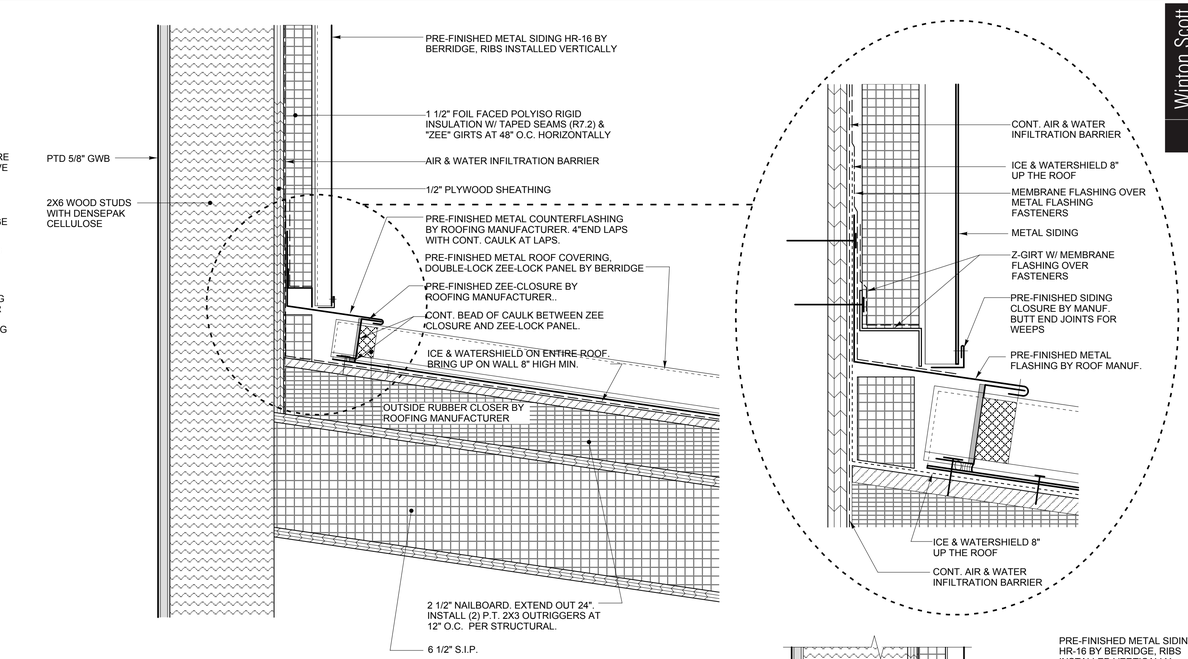

2 ROOF DETAIL AT WALL

SCALE: 3" = 1'-0"

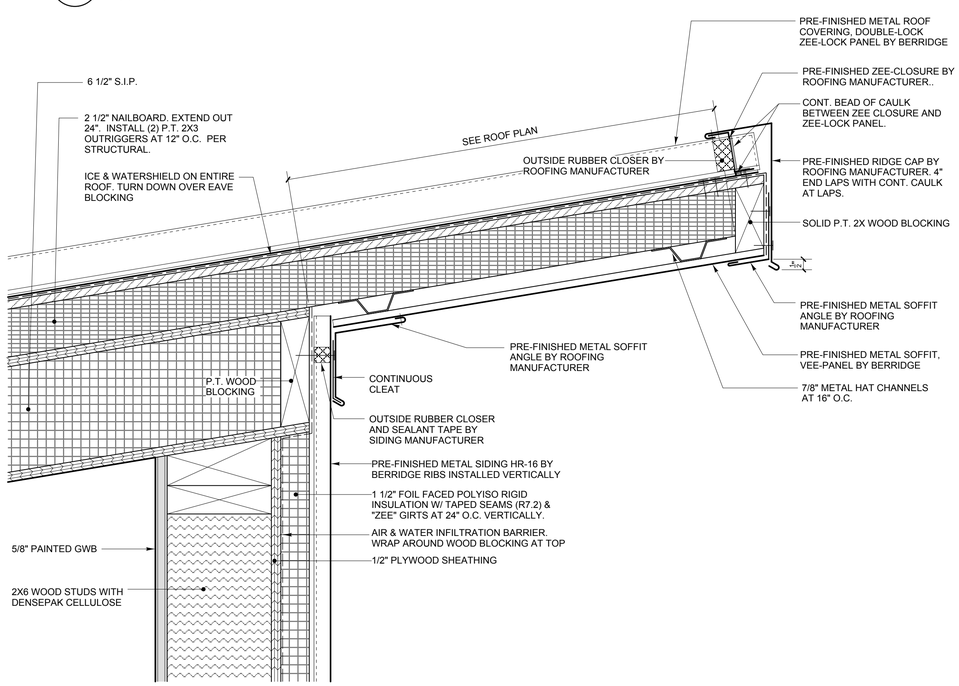

3 ROOF DETAIL AT HIGH OVERHANG

SCALE: 3" = 1'-0"

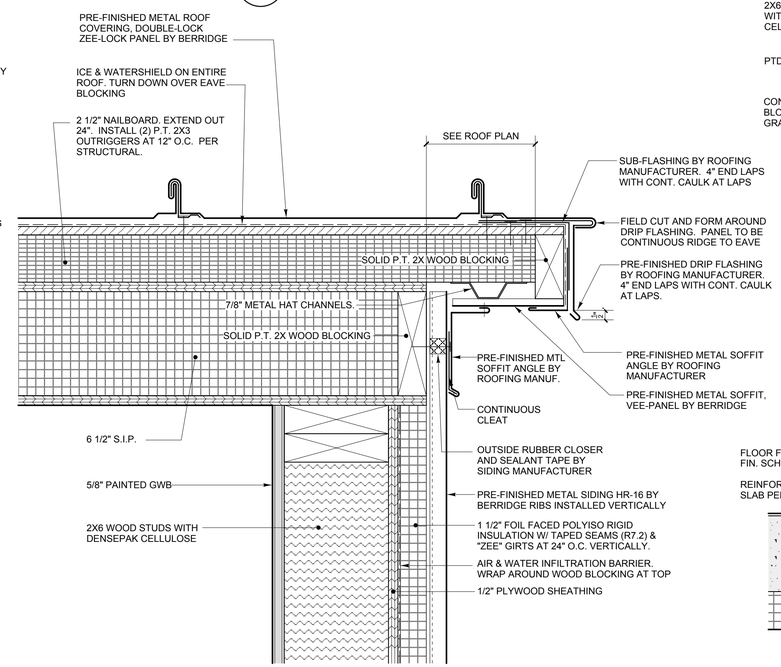

4 ROOF EDGE DETAIL

SCALE: 3" = 1'-0"

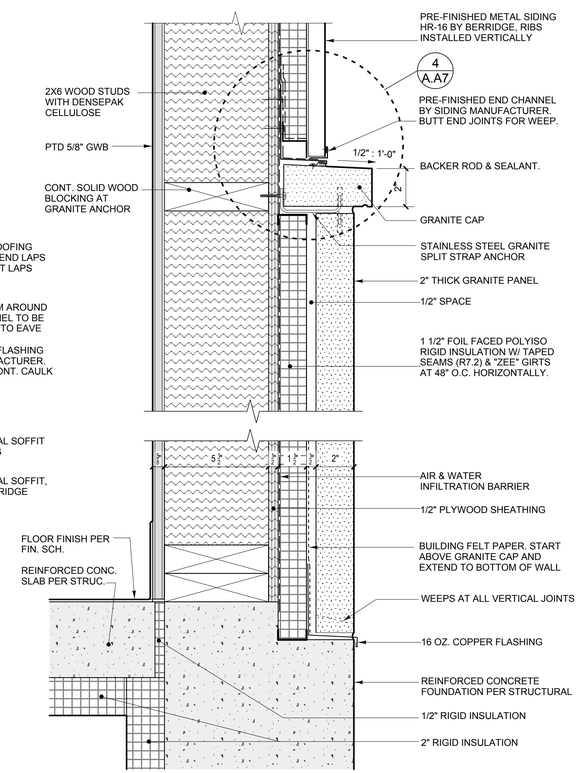

5 WALL SECTION DETAIL

SCALE: 3" = 1'-0"

Winton Scott Architects

STATE OF MAINE
DEPARTMENT OF TRANSPORTATION

PROJECT NUMBER 01782.00

PIN 017820.00

		BY	DATE
PROJ. MANAGER	CRAIG MORIN		
DESIGN-DETAILED	ML		3/25/11
CHECKED-REVIEWED	SWW		
DESIGN2-DETAILED2			
DESIGN3-DETAILED3			
REVISIONS 1			
REVISIONS 2			
REVISIONS 3			
REVISIONS 4			
FIELD CHANGES			

SIGNATURE

P.E. NUMBER #793

DATE 3/25/11

PORTLAND INTERNATIONAL MARINE TERMINAL IMPROVEMENTS
PORTLAND CUMBERLAND COUNTY

EXTERIOR DETAILS I

SHEET NUMBER

A.A6

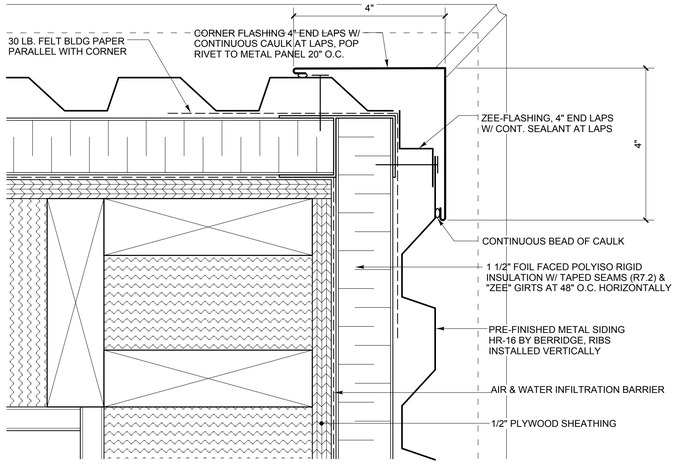

1 OUTSIDE CORNER DETAIL AT METAL SIDING

SCALE: 6" = 1'-0"

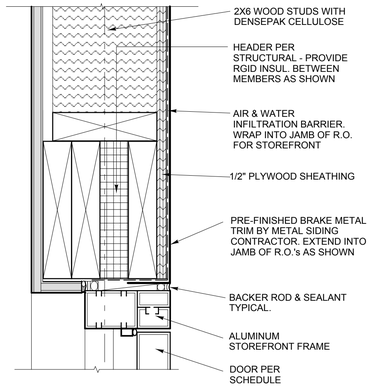

6 HEAD DETAIL AT STOREFRONT

SCALE: 3" = 1'-0"

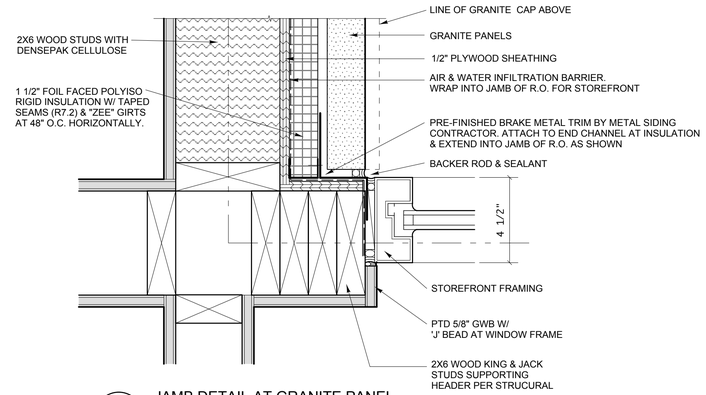

5A JAMB DETAIL AT GRANITE PANEL

SCALE: 3" = 1'-0"

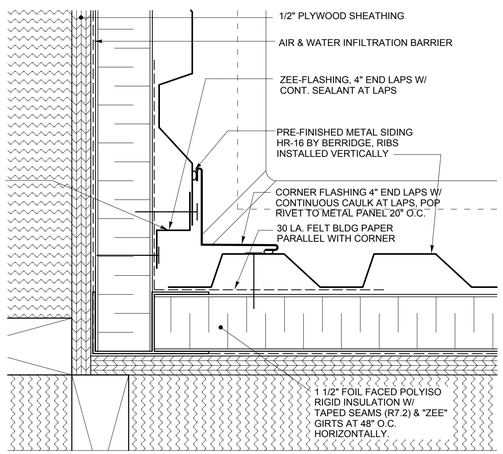

2 INSIDE CORNER DETAIL AT METAL SIDING

SCALE: 6" = 1'-0"

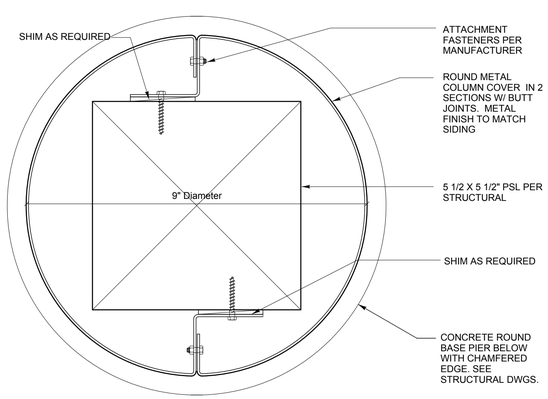

3 METAL COLUMN COVER DETAIL

SCALE: 6" = 1'-0"

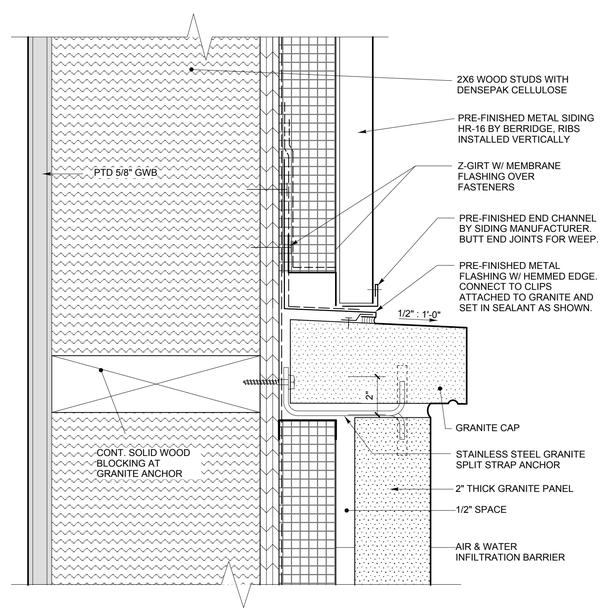

4 METAL SIDING DETAIL AT GRANITE CAP

SCALE: 6" = 1'-0"

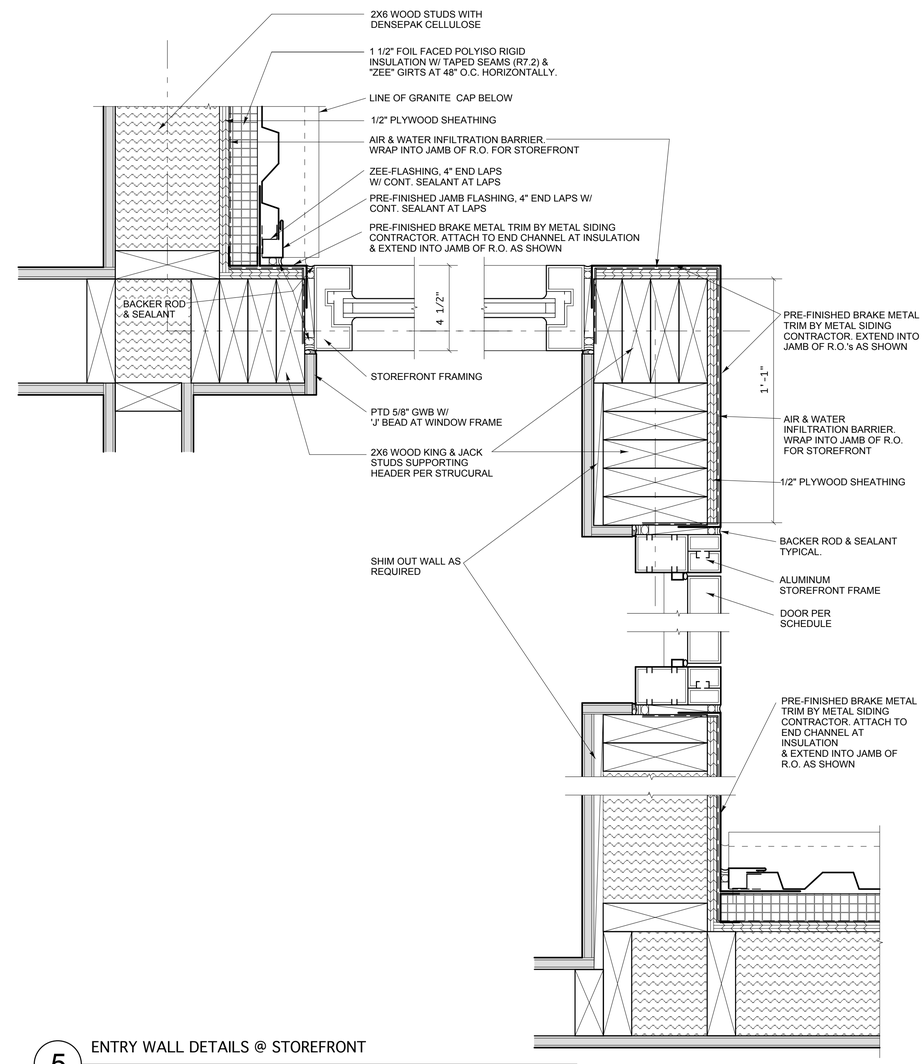

5 ENTRY WALL DETAILS @ STOREFRONT

SCALE: 3" = 1'-0"

Winton Scott Architects

STATE OF MAINE
DEPARTMENT OF TRANSPORTATION

PROJECT NUMBER 01782.00

PIN 017820.00

	BY	DATE
PROJ. MANAGER	CRAIG MORIN	
DESIGN-DETAILED	- ML	3/25/11
CHECKED-REVIEWED	- SWW	-
DESIGN2-DETAILED2	-	-
DESIGN3-DETAILED3	-	-
REVISIONS 1	-	-
REVISIONS 2	-	-
REVISIONS 3	-	-
REVISIONS 4	-	-
FIELD CHANGES	-	-

SIGNATURE

P.E. NUMBER #793

DATE 3/25/11

PORTLAND INTERNATIONAL MARINE TERMINAL IMPROVEMENTS
PORTLAND CUMBERLAND COUNTY

EXTERIOR DETAILS II

SHEET NUMBER

A.A7

WINDOW SCHEDULE

General		Frame		Details			Notes
Window No.	Type	Material	Finish	Head	Jamb	Sill	
FIRST FLOOR - LOW							
1.1	A	ALUM	FF	6/A.A7 SIM	5/A.A7	S3	
1.2	G	ALUM	FF	H1	J2 / J4	S1	
1.3	C	ALUM	FF	H1	J2 / J3	S1	
1.4	D	ALUM	FF	H1	J1 / J3	S1	
1.5	E	ALUM	FF	H1	J1 / J3	S1	
1.6	E	ALUM	FF	H1	J1 / J3	S1	
1.7	E	ALUM	FF	H1	J1 / J2	S1	
1.8	F	ALUM	FF	H1	J2	S1	
1.9	G	ALUM	FF	H1	J1 / J2	S1	
1.10	H	ALUM	FF	H1	J1	S1	
1.11	D	ALUM	FF	H1	J1	S1	
1.12	D	ALUM	FF	H1	J1	S1	
1.13	E	ALUM	FF	H1	J1	S1	
1.14	G	ALUM	FF	H1	J1 / J2	S1	
1.15	D	ALUM	FF	H1	J1 / J2	S1	
1.16	E	ALUM	FF	H1	J1 / J2	S1	
1.17	G	ALUM	FF	H1	J1 / J2	S1	
1.18	D	ALUM	FF	H1	J1	S1	
1.19	E	ALUM	FF	H1	J1	S1	
1.20	J	ALUM	FF	H1	J1 / J3 sim	S1	
1.21	J	ALUM	FF	H1	J3 sim	S1	
1.22	J	ALUM	FF	H1	J3 sim	S1	
1.23	J	ALUM	FF	H1	J2 / J3	S1	
1.24	J	ALUM	FF	H1	J1 / J2	S1	
FIRST FLOOR - HIGH							
2.1	K	ALUM	FF	H1	J1 / J2	S2	
2.2	L	ALUM	FF	H1	J2 / J3	S2	
2.3	L	ALUM	FF	H1	J3	S2	
2.4	L	ALUM	FF	H1	J3	S2	
2.5	L	ALUM	FF	H1	J3	S2	
2.6	L	ALUM	FF	H1	J2 / J3	S2	
2.7	K	ALUM	FF	H1	J1 / J2	S2	

ABBREVIATIONS

FF Factory Finish
ALUM. Aluminum

GENERAL NOTES

- Refer to floor plans and building elevations for window type location
- Provide tempered glass at any window unit less than 18" above the floor. Also provide tempered glass for glass installed in doors or located within 24" of a door.
- See specifications for glazing types

KEY NOTES

WINDOW TYPES

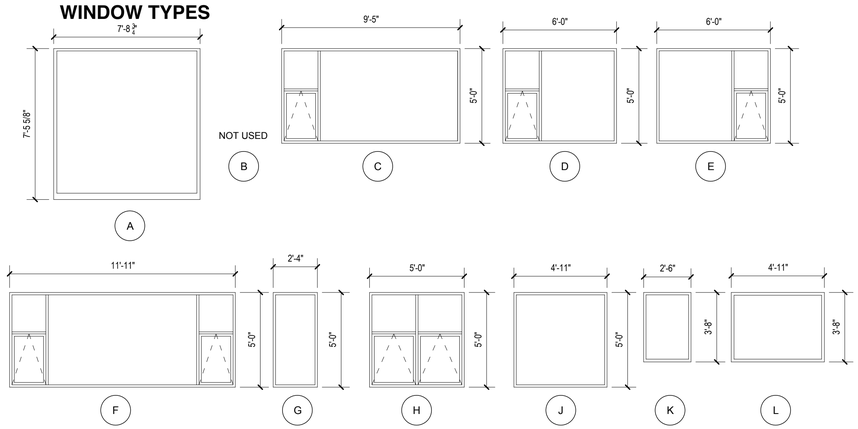

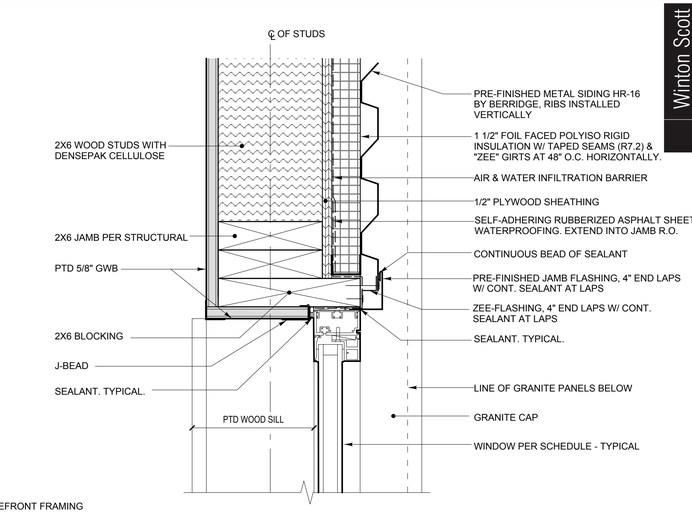

J1 TYPICAL JAMB DETAIL
SCALE: 3" = 1'-0"

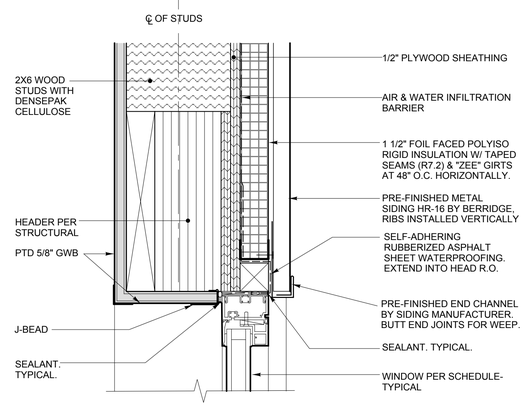

H1 TYPICAL HEAD DETAIL
SCALE: 3" = 1'-0"

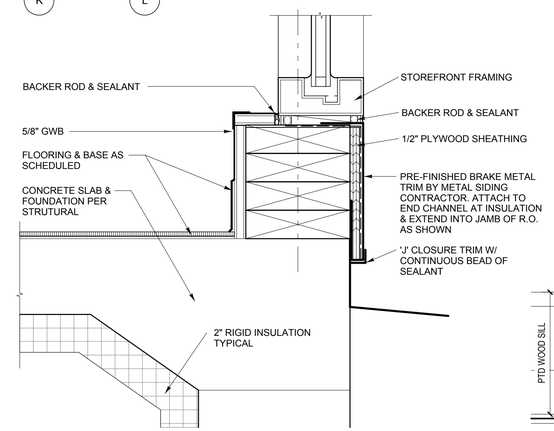

S3 SILL DETAIL AT STOREFRONT
SCALE: 3" = 1'-0"

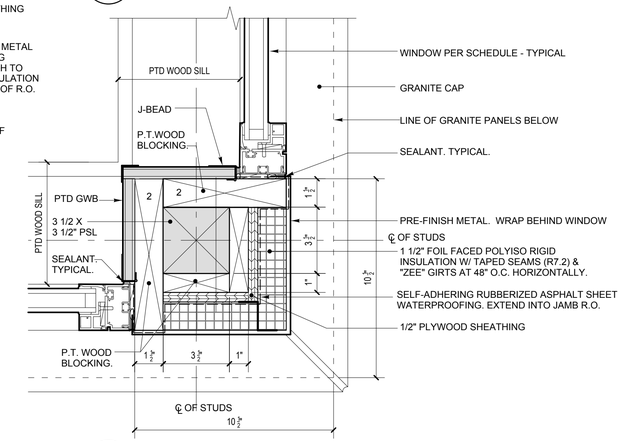

J2 JAMB DETAIL AT CORNER WINDOW
SCALE: 3" = 1'-0"

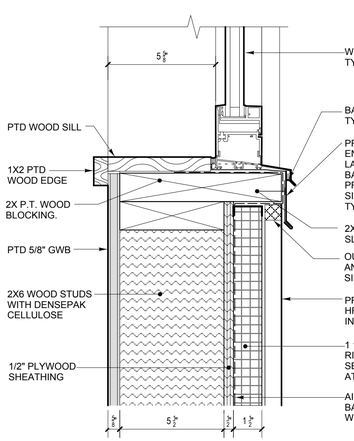

S2 TYPICAL SILL DETAIL AT UPPER WINDOWS
SCALE: 3" = 1'-0"

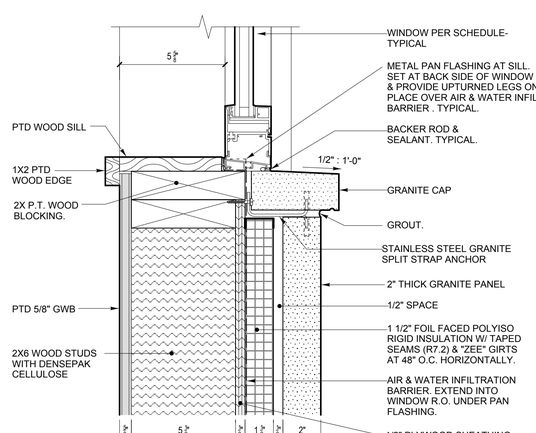

S1 TYPICAL SILL DETAIL AT PRECAST
SCALE: 3" = 1'-0"

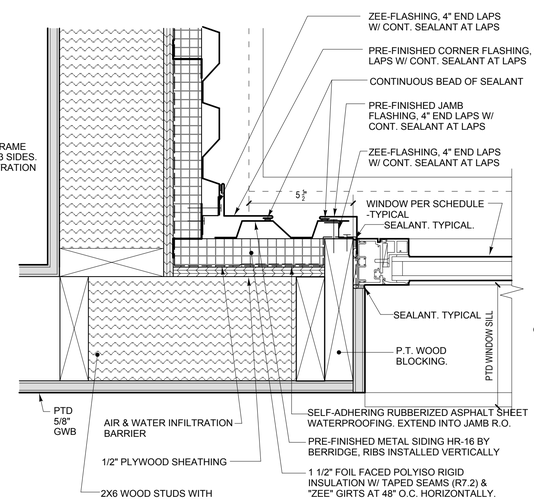

J4 JAMB DETAIL AT INSIDE CORNER
SCALE: 3" = 1'-0"

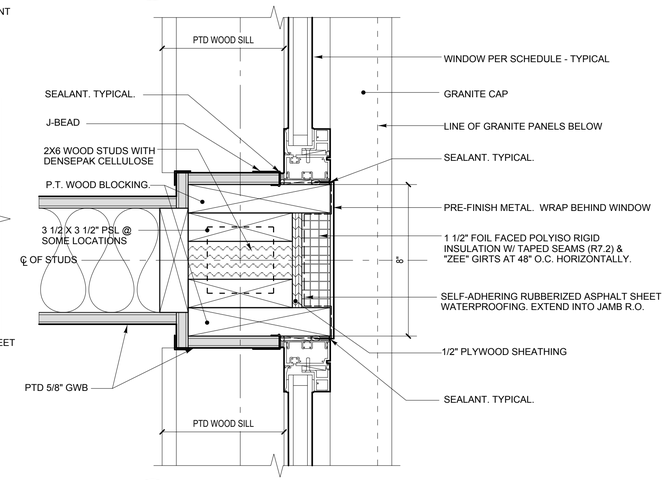

J3 TYPICAL JAMB DETAIL
SCALE: 3" = 1'-0"

Winton Scott Architects
© 2010 Winton Scott Architects

STATE OF MAINE
DEPARTMENT OF TRANSPORTATION

PROJECT NUMBER 01782.00

PIN 017820.00

REGISTERED ARCHITECT & STATE OF MAINE
WINTON H. SCOTT, JR. No. 793

	BY	DATE
PROJ. MANAGER	CRAIG MORIN	
DESIGN-DETAILED	- ML	3/25/11
CHECKED-REVIEWED	- SWW	-
DESIGN2-DETAILED2	-	-
DESIGN3-DETAILED3	-	-
REVISIONS 1	-	-
REVISIONS 2	-	-
REVISIONS 3	-	-
REVISIONS 4	-	-
FIELD CHANGES	-	-

SIGNATURE
P.E. NUMBER #793
DATE 3/25/11

PORTLAND INTERNATIONAL
MARINE TERMINAL IMPROVEMENTS
PORTLAND CUMBERLAND COUNTY

WINDOW SCHEDULE & DETAILS

SHEET NUMBER
A.A8

DOOR & FRAME SCHEDULE

General			Door			Frame			Details					
Door No.	Size (W x H)	Thickness	Material	Finish	Type	Material	Finish	Type	Head	Jamb	Threshold	Hardware	Label	Remarks
101.1	3'-0" X 7'-0"	1 3/4"	SCWD	Clr. F.	A	HM	Ptd	F1	H1	J1	T7	HW3	--	
102.1	3'-0" X 7'-0"	1 3/4"	SCWD	Clr. F.	A	HM	Ptd	F5	H1	J1	T1	HW3	--	
103.1	3'-0" X 7'-0"	1 3/4"	SCWD	Clr. F.	A	HM	Ptd	F3	H1	J1	T1	HW3	--	
104.1	3'-0" X 7'-0"	1 3/4"	SCWD	Clr. F.	A	HM	Ptd	F4	H1	J1	T1	HW3	--	
105.1	3'-0" X 7'-0"	1 3/4"	SCWD	Clr. F.	A	HM	Ptd	F5	H1	J1	T1	HW3	--	
106.1	3'-0" X 7'-0"	1 3/4"	SCWD	Clr. F.	A	HM	Ptd	F6	H1	J1	--	HW3	--	
107.1	3'-0" X 7'-0"	1 3/4"	AL	F.F.	D	AL	F.F.	F1	H2	J2	T2	HW1	--	
107.2	3'-0" X 7'-10"	1 3/4"	AL	F.F.	D	AL	F.F.	F1	H3	J3	T3	HW2	--	
108.1	3'-0" X 7'-0"	1 3/4"	SCWD	Clr. F.	A	HM	Ptd	F1	H1	J1	T1	HW3	--	
110.1	PR 2'-0" X 7'-0"	1 3/4"	SCWD	Clr. F.	C	HM	Ptd	F1	H1	J1	T4	HW4	--	
111.1	3'-0" X 7'-10"	1 3/4"	AL	F.F.	D	AL	F.F.	F1	H3	J3	T3	HW2	--	
112.1	3'-0" X 7'-0"	1 3/4"	SCWD	Clr. F.	C	HM	Ptd	F1	H1	J1	T5	HW5	--	
113.1	3'-0" X 7'-0"	1 3/4"	SCWD	Clr. F.	C	HM	Ptd	F1	H4	J4	T5	HW5	--	
114.1	3'-0" X 7'-0"	1 3/4"	SCWD	Clr. F.	C	HM	Ptd	F1	H4	J4	T5	HW5	--	
115.1	3'-0" X 7'-10"	1 3/4"	AL	F.F.	B	AL	F.F.	F1	H2	J2	T2	HW2	--	
115.2	3'-0" X 7'-10"	1 3/4"	AL	F.F.	B	AL	F.F.	F1	5A/A7.7	5/A7.7	T3	HW2	--	
117.1	3'-0" X 7'-0"	1 3/4"	SCWD	Clr. F.	A	HM	Ptd	F1	H4	J4	T1	HW3	--	
117.2	3'-0" X 7'-0"	1 3/4"	SCWD	Clr. F.	A	HM	Ptd	F1	H4	J4	T1	HW3	--	
118.1	3'-0" X 7'-0"	1 3/4"	SCWD	Clr. F.	C	HM	Ptd	F1	H4	J4	--	HW4	--	
119.1	3'-0" X 7'-0"	1 3/4"	SCWD	Clr. F.	C	HM	Ptd	F1	H4	J4	--	HW4	--	
120.1	3'-0" X 7'-10"	1 3/4"	AL	F.F.	E	AL	F.F.	F1	H3	J3	T3	HW4	--	
121.1	3'-0" X 7'-0"	1 3/4"	SCWD	Clr. F.	A	HM	Ptd	F1	H4	J4	T1	HW3	--	
122.1	3'-0" X 7'-0"	1 3/4"	SCWD	Clr. F.	A	HM	Ptd	F1	H4	J4	T1	HW3	--	
123.1	3'-0" X 7'-10"	1 3/4"	AL	F.F.	B	AL	F.F.	F1	H2	J2	T2	HW1	--	
123.2	3'-0" X 7'-10"	1 3/4"	AL	F.F.	B	AL	F.F.	F1	H3	J3	T6	HW2	--	
124.1	3'-0" X 7'-0"	1 3/4"	SCWD	Clr. F.	A	HM	Ptd	F1	H4	J4	T1	HW3	--	
125.1	3'-0" X 7'-0"	1 3/4"	SCWD	Clr. F.	A	HM	Ptd	F1	H4	J4	T1	HW3	--	

ABBREVIATIONS

SCWD	Solid Core wood door
Clr. F.	Clear Finish
F.F.	Factory Finish
HM	Hollow Metal
GHM	Galvanized Hollow Metal
Ptd.	Painted
HW	Hardware Set
TG	Tempered Glass
FG	Fire Glass
SP	Spandrel Glass

DOOR TYPES

1/4" = 1'-0"

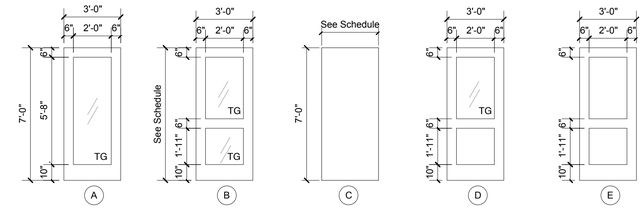

FRAME TYPES

1/4" = 1'-0"

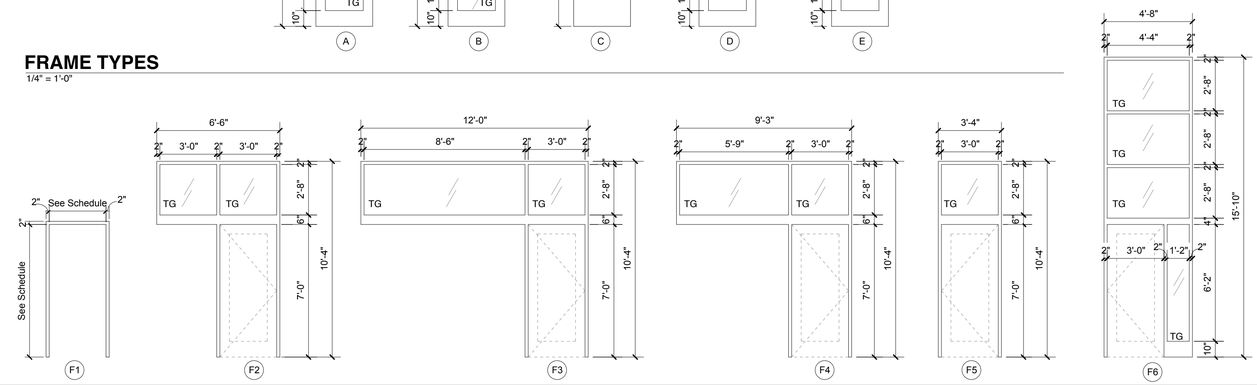

DOOR DETAILS

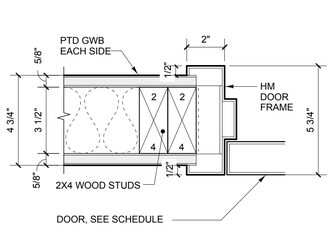

J1 H1 JAMB DETAIL / HEAD SIMILAR
SCALE: 3" = 1'-0"

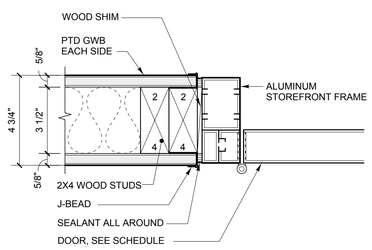

J2 H2 JAMB DETAIL / HEAD SIMILAR
SCALE: 3" = 1'-0"

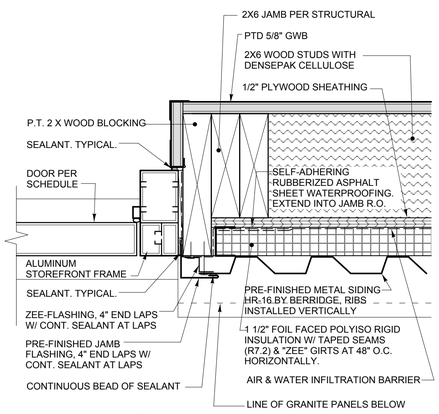

J3 JAMB DETAIL AT METAL SIDING
SCALE: 3" = 1'-0"

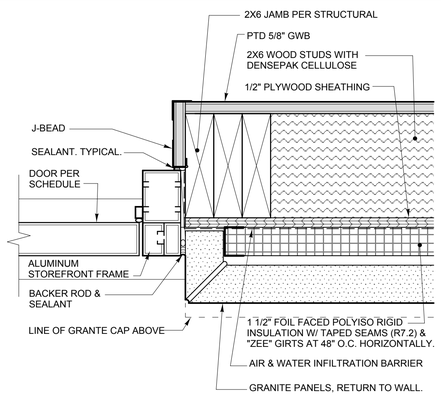

J3 JAMB DETAIL AT GRANITE PANEL
SCALE: 3" = 1'-0"

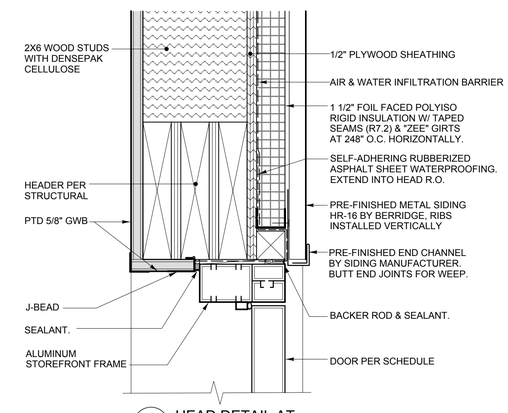

H3 HEAD DETAIL AT
SCALE: 3" = 1'-0"

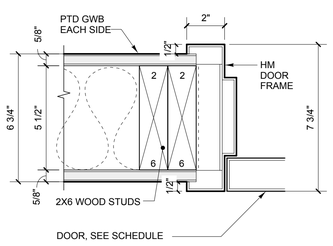

J4 H4 JAMB DETAIL / HEAD SIMILAR
SCALE: 3" = 1'-0"

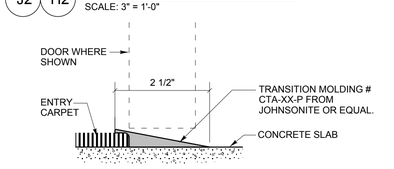

T2 TRANSITION FROM ENTRY CARPET TO CONC.
SCALE: 6" = 1'-0"

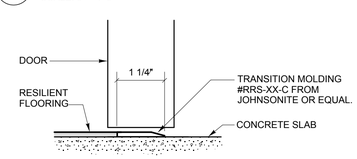

T4 TRANSITION FROM CONC. TO RESILIENT
SCALE: 6" = 1'-0"

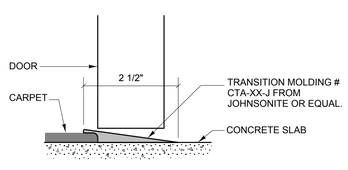

T1 TRANSITION FROM CARPET TO CONC.
SCALE: 6" = 1'-0"

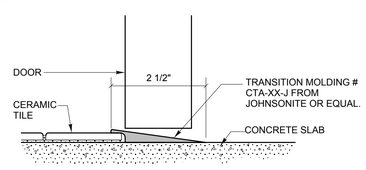

T5 TRANSITION FROM CONC. TO CERAMIC TILE
SCALE: 6" = 1'-0"

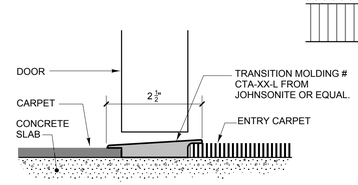

T7 TRANSITION FROM ENTRY CARPET TO CARPET
SCALE: 6" = 1'-0"

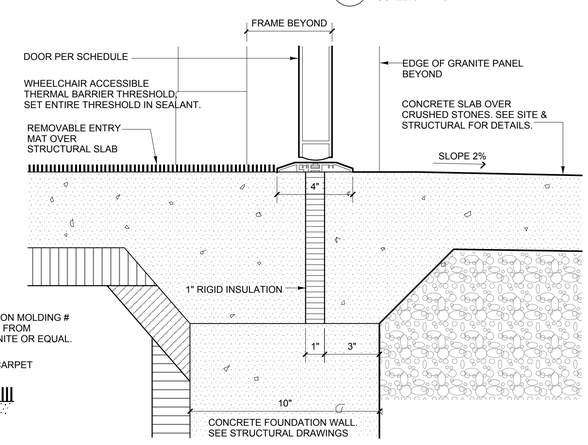

T3 THRESHOLD DETAIL
SCALE: 3" = 1'-0"

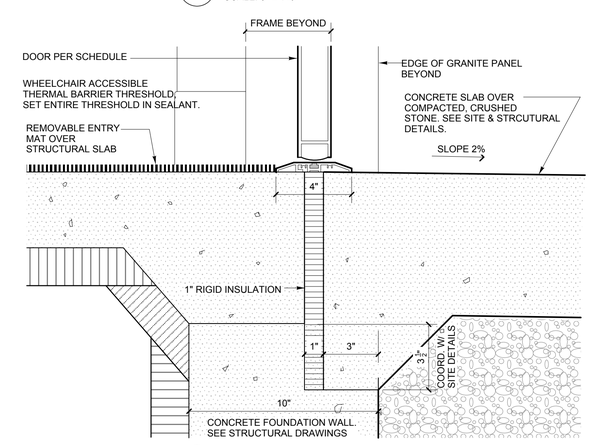

T6 THRESHOLD DETAIL
SCALE: 3" = 1'-0"

Winton Scott Architects
100 Middle Street, Portland, Maine 04101

STATE OF MAINE
DEPARTMENT OF TRANSPORTATION

PROJECT NUMBER 01782.00

PIN 017820.00

REGISTERED ARCHITECT & PROFESSIONAL ENGINEER WINTON R. SCOTT, JR. No. 793 STATE OF MAINE

	SIGNATURE	P.E. NUMBER	DATE
	-	#793	3/25/11

	BY	DATE
PROJ. MANAGER	PAUL POTTLE	
DESIGN-DETAILED	MIL	3/25/11
CHECKED-REVIEWED	SWW	-
DESIGN2-DETAILED2	-	-
DESIGN3-DETAILED3	-	-
REVISIONS 1	-	-
REVISIONS 2	-	-
REVISIONS 3	-	-
REVISIONS 4	-	-
FIELD CHANGES	-	-

PORTLAND INTERNATIONAL
MARINE TERMINAL IMPROVEMENTS
PORTLAND CUMBERLAND COUNTY

DOOR SCHEDULE & DETAILS

SHEET NUMBER

A.A9

FINISH SCHEDULE

Room Name	Floor	Base	Walls	Ceiling	Remarks
Office 101	Carpet	4" rubber	Ptd GWB	ACT	
Office 102	Carpet	4" rubber	Ptd GWB	ACT	
Meeting 103	Carpet	4" rubber	Ptd GWB	ACT	
Office 104	Carpet	4" rubber	Ptd GWB	ACT	
Security Office 105	Carpet	4" rubber	Ptd GWB	ACT	
Secure Hallway 106	Concrete	4" rubber	Ptd GWB	SWC	
Entry 107	Entry carpet	4" rubber	Ptd GWB	ACT	
Office 108	Carpet	4" rubber	Ptd GWB	ACT	
Workroom 109	Resilient	4" rubber	Ptd GWB	ACT	
Server / Data 110	Resilient	4" rubber	Ptd GWB	ACT	
Kitchenette 111	Resilient	4" rubber	Ptd GWB	ACT	
Toilet / Shower 112	CT	4" CT	Ptd GWB	MR-ACT	
Men's Room 113	CT	4" CT	Ptd GWB	ACT	
Women's Room 114	CT	4" CT	Ptd GWB	ACT	
Entry 115	Entry carpet	4" rubber	Ptd GWB	SWC	
Public Lobby / Hallway 116	Concrete	4" rubber	Ptd GWB	SWC	
Conference 117	Carpet	4" wood	Ptd GWB	SWC	
Janitor / Storage 118	Resilient	4" rubber	Ptd GWB	ACT	
Electrical 119	Resilient	4" rubber	Ptd GWB	ACT	
Mechanical 120	Resilient	4" rubber	Ptd GWB	No ceiling	
Office 121	Carpet	4" rubber	Ptd GWB	ACT	
Offices-2 122	Carpet	4" rubber	Ptd GWB	ACT	
Vestibule 123	Entry carpet	4" rubber	Ptd GWB	SWC	
Offices-2 124	Carpet	4" rubber	Ptd GWB	ACT	
Office 125	Carpet	4" rubber	Ptd GWB	ACT	

ABBREVIATIONS

CT	Ceramic Tile
GWB	Gypsum Wall Board
ACT	Acoustical Ceiling Tile
MR-ACT	Moisture Resistant Acoustical Ceiling Tile
SWC	Suspended Wood Ceiling
PTD	Painted

PARTITION TYPES

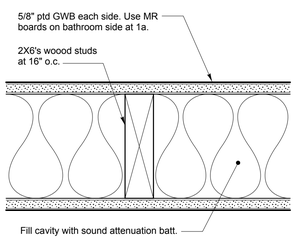

1 Typical Interior Bearing Partition
As Shown. Extend from slab to underside of roof panels

1a Typical Interior Bearing Partition at Bathroom
Use 5/8" MR Board on Bathroom side in lieue of GWB. Extend from slab to underside of roof panels

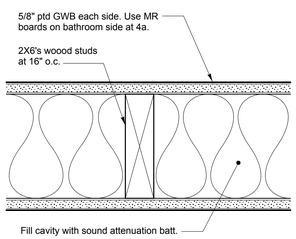

4 Interior Sound Partition
As Shown. Extend from slab to underside of roof panels

4a Interior Sound Partition at Bathroom
Use 5/8" MR Board on Bathroom side in lieue of GWB. Extend from slab to underside of roof panels

4b Interior Partition
Omit sound attenuation batt.

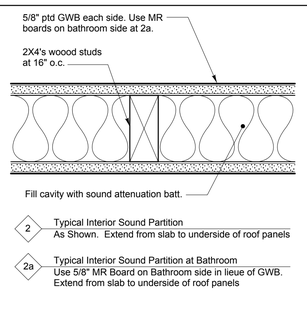

2 Typical Interior Sound Partition
As Shown. Extend from slab to underside of roof panels

2a Typical Interior Sound Partition at Bathroom
Use 5/8" MR Board on Bathroom side in lieue of GWB. Extend from slab to underside of roof panels

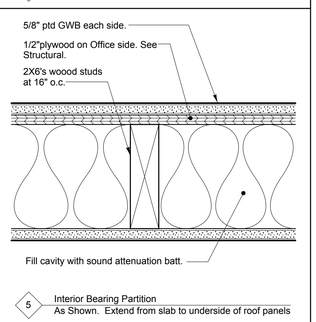

5 Interior Bearing Partition
As Shown. Extend from slab to underside of roof panels

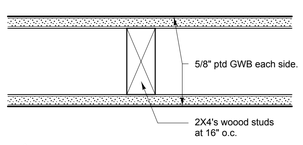

3 Typical Interior Partition
As Shown.

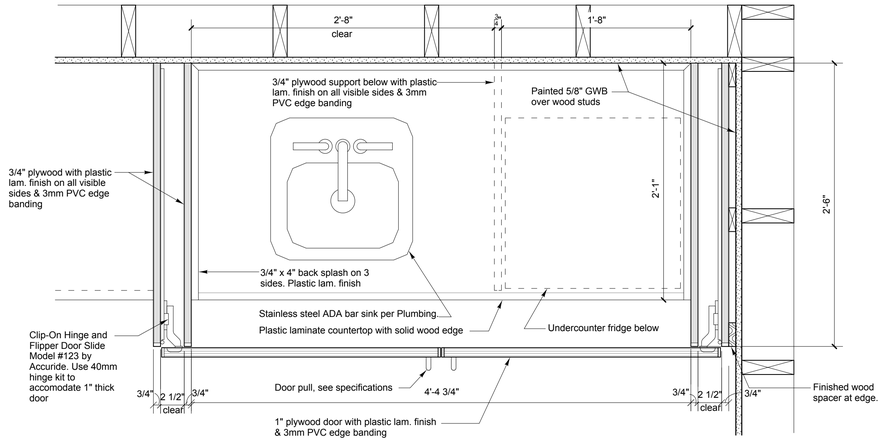

3 PLAN DETAIL AT CONF. ROOM SINK CABINET
SCALE: 1 1/2" = 1'-0"

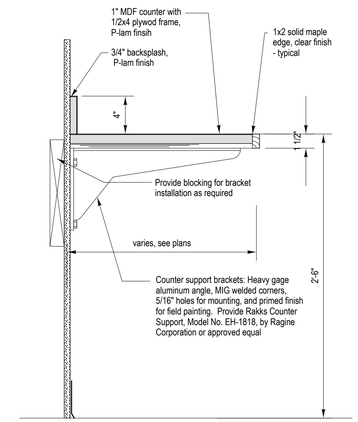

5 COUNTERTOP DETAIL
SCALE: 1 1/2" = 1'-0"

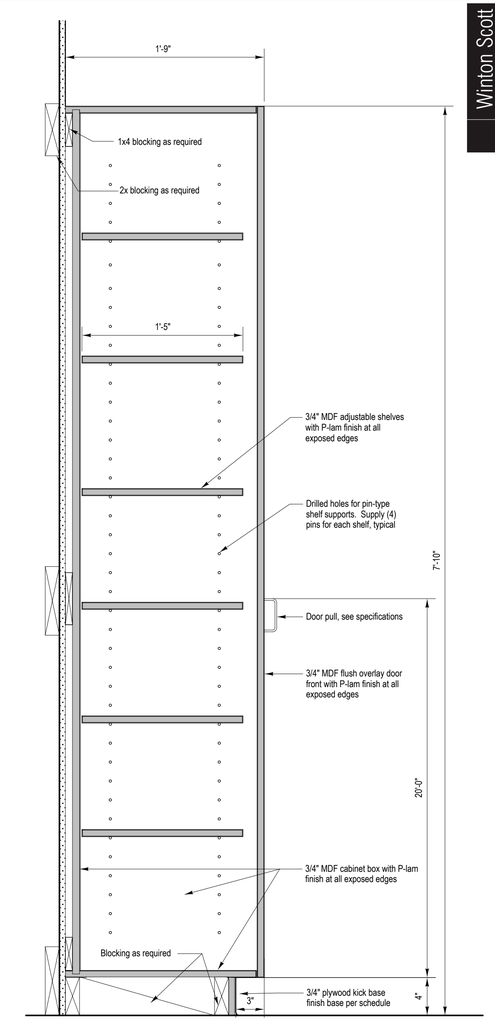

6 CABINET DETAIL AT CONFERENCE RM.
SCALE: 1 1/2" = 1'-0"

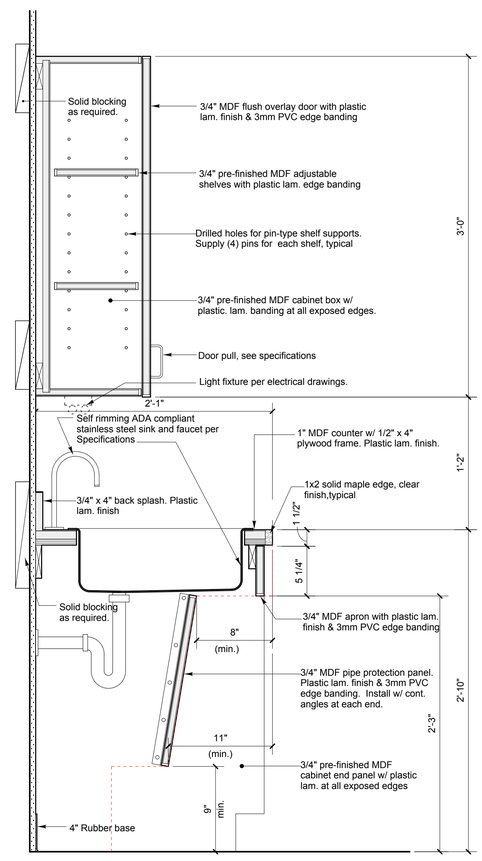

1 SECTION DETAIL AT SINK
SCALE: 1 1/2" = 1'-0"

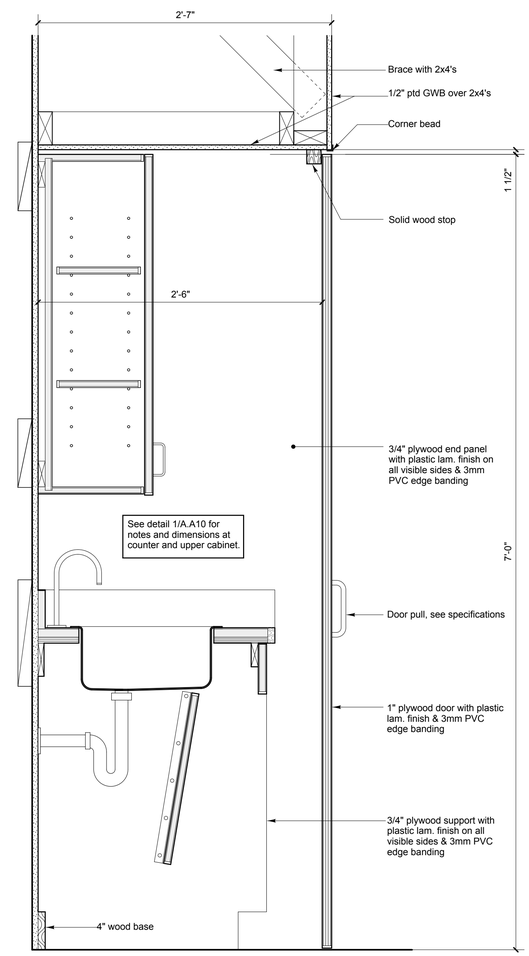

2 SECTION DETAIL AT CONF. ROOM SINK CABINET
SCALE: 1 1/2" = 1'-0"

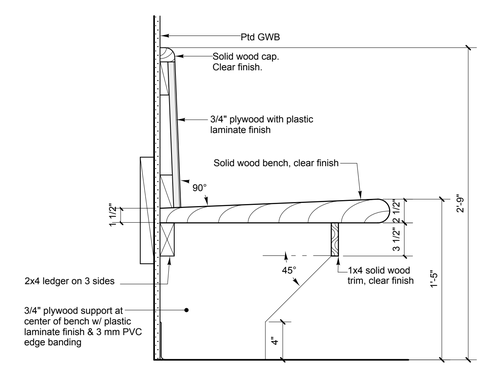

4 ENTRY BENCH DETAIL
SCALE: 1 1/2" = 1'-0"

Winton Scott Architects
100 Middle Street, Portland, Maine 04101

STATE OF MAINE
DEPARTMENT OF TRANSPORTATION

PROJECT NUMBER 01782.00

PIN 017820.00

		BY	DATE
PROJ. MANAGER	PAUL POTTLE		
DESIGN-DETAILED	MIL	-	3/25/11
CHECKED-REVIEWED	SWW	-	-
DESIGN2-DETAILED2	-	-	-
DESIGN3-DETAILED3	-	-	-
REVISIONS 1	-	-	-
REVISIONS 2	-	-	-
REVISIONS 3	-	-	-
REVISIONS 4	-	-	-
FIELD CHANGES	-	-	-

REGISTERED ARCHITECT WINTON F. SCOTT, JR. No. 793 STATE OF MAINE

SIGNATURE	
P.E. NUMBER	#793
DATE	3/25/11

PORTLAND INTERNATIONAL
MARINE TERMINAL IMPROVEMENTS
PORTLAND CUMBERLAND COUNTY

FINISH SCHEDULE
PARTITION TYPES & DETAILS

SHEET NUMBER
A.A10

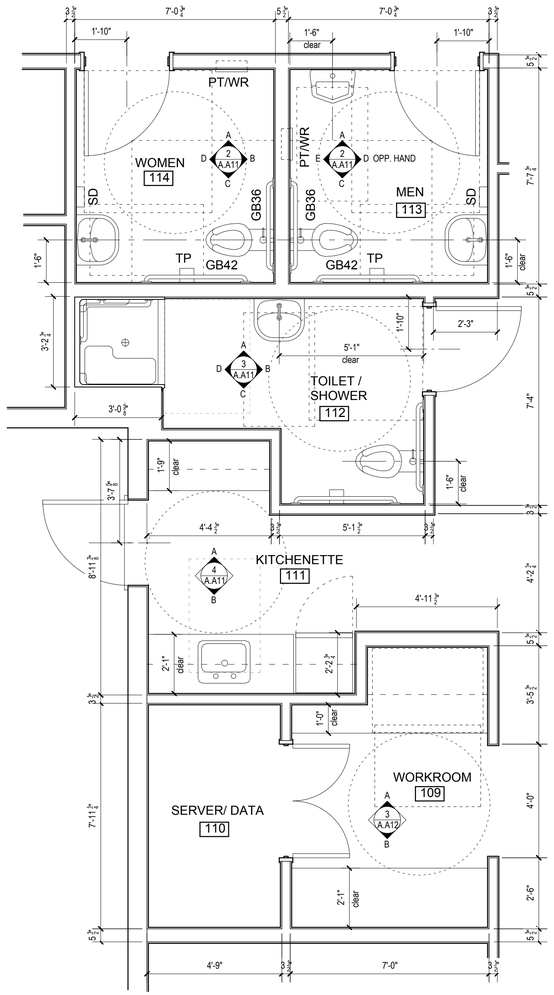

1 BATHROOMS & KITCHENETTE ENLARGED PLAN

SCALE: 3/8" = 1'-0"

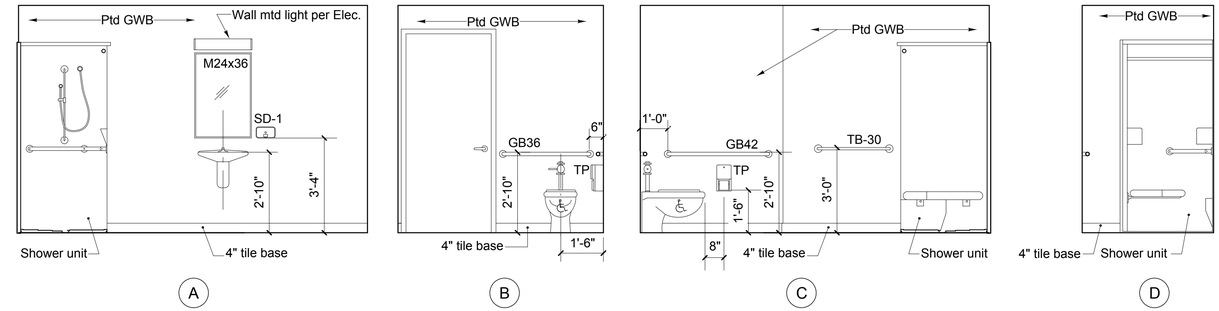

3 TOILET / SHOWER ROOM ELEVATIONS

SCALE: 3/8" = 1'-0"

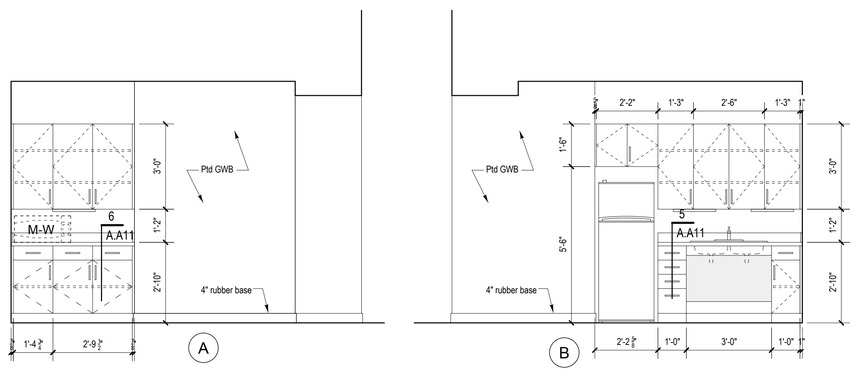

4 KITCHENETTE 111 - ELEVATIONS

SCALE: 3/8" = 1'-0"

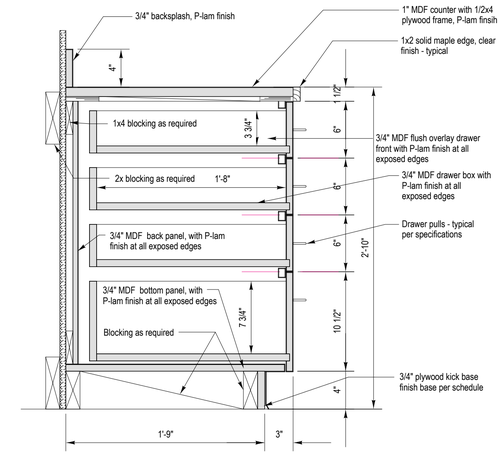

5 BASE CABINET -FULL HT. DRAWERS DETAIL

SCALE: 1 1/2" = 1'-0"

NOTE:

COORDINATE ELECTRICAL & VOICES OUTLET LOCATIONS WITH ELECTRICAL DRAWINGS.

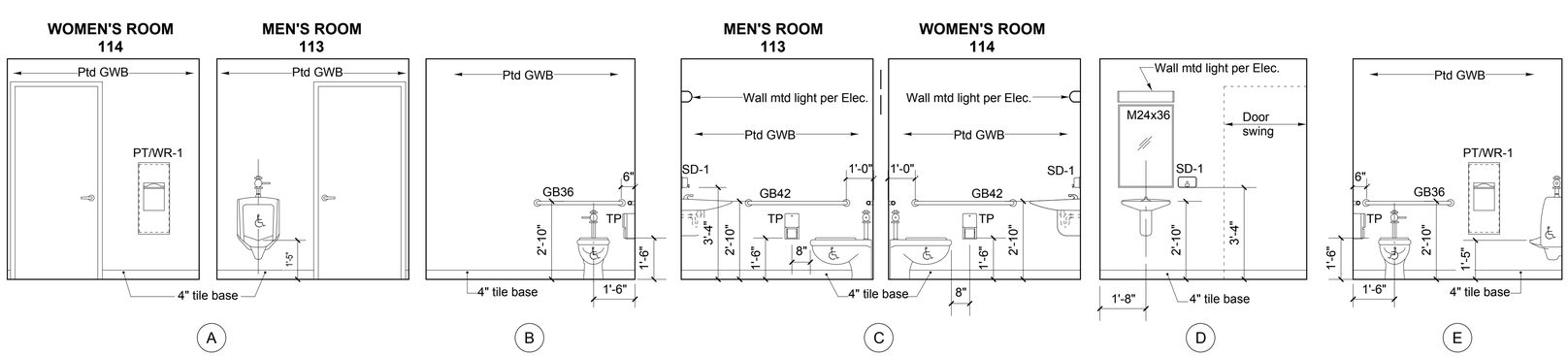

2 TOILET ROOM ELEVATIONS

SCALE: 3/8" = 1'-0"

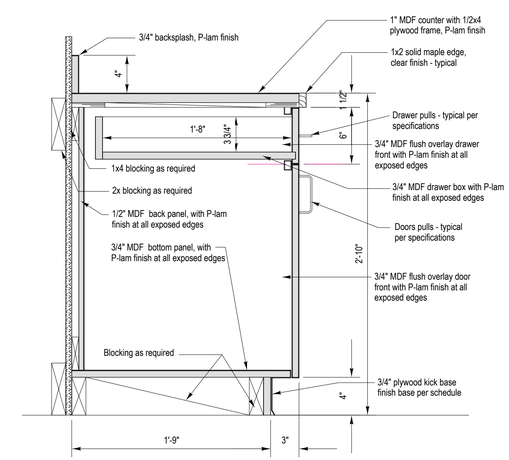

6 BASE CABINET -FULL HT. DRAWERS DETAIL

SCALE: 1 1/2" = 1'-0"

Winton Scott Architects

STATE OF MAINE
DEPARTMENT OF TRANSPORTATION

PROJECT NUMBER 01782.00

PIN 017820.00

	BY	DATE
PROJ. MANAGER	CRAIG MORIN	
DESIGN-DETAILED	MIL	3/25/11
CHECKED-REVIEWED	SWW	
DESIGN2-DETAILED2		
DESIGN3-DETAILED3		
REVISIONS 1		
REVISIONS 2		
REVISIONS 3		
REVISIONS 4		
FIELD CHANGES		

SIGNATURE

P.E. NUMBER #793

DATE 3/25/11

PORTLAND INTERNATIONAL MARINE TERMINAL IMPROVEMENTS
PORTLAND CUMBERLAND COUNTY

BATHROOM & KITCHENETTE FLOOR PLANS & ELEVATIONS

SHEET NUMBER

A.A11

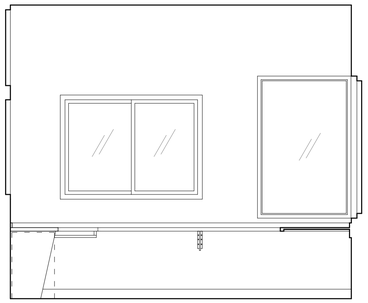

A

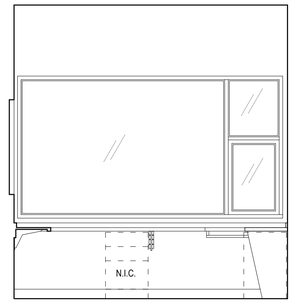

B

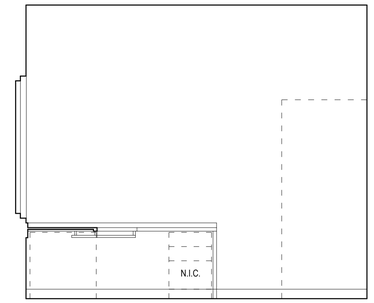

C

D

1 SECURITY OFFICE 105 - ELEVATIONS

SCALE: 3/8" = 1'-0"

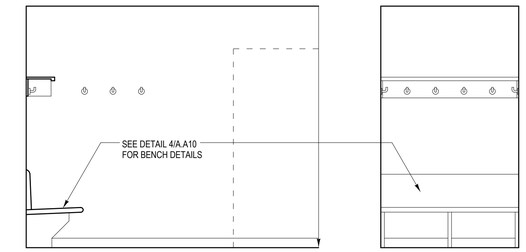

A A

2 ENTRY 107 - ELEVATIONS

SCALE: 3/8" = 1'-0"

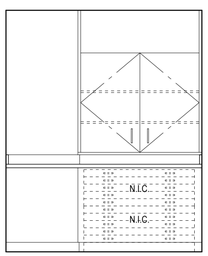

A

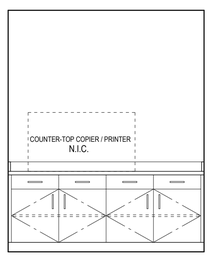

B

3 WORKROOM 109 - ELEVATIONS

SCALE: 3/8" = 1'-0"

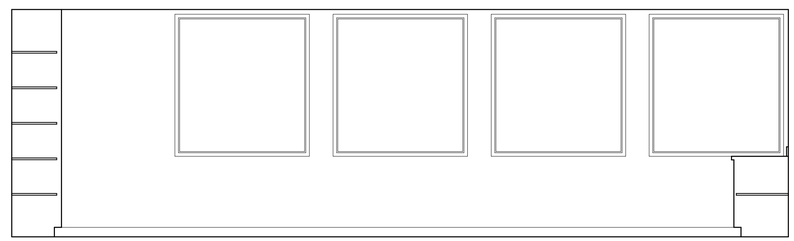

A

4 CONFERENCE ROOM 117 - ELEVATIONS

SCALE: 3/8" = 1'-0"

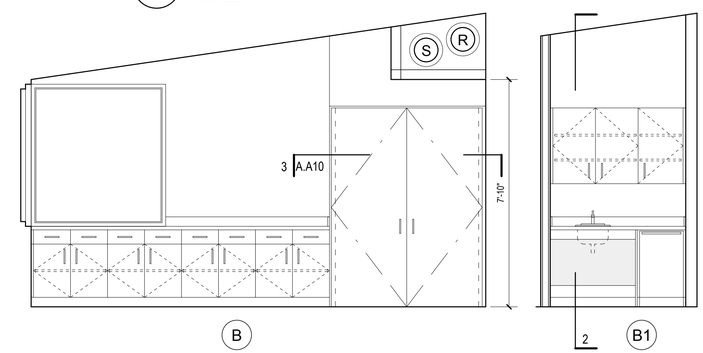

B B1

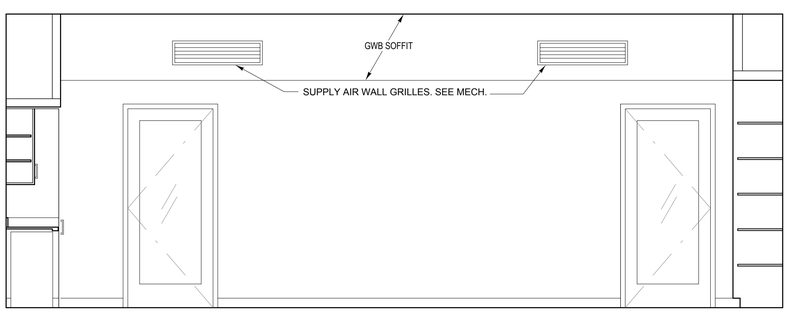

C

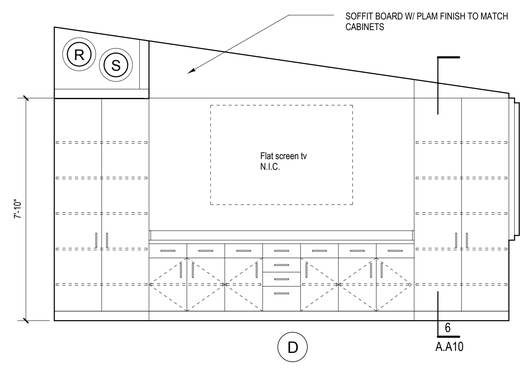

D

4 CONFERENCE ROOM 117 - ELEVATIONS

SCALE: 3/8" = 1'-0"

NOTE:

COORDINATE ELECTRICAL & VOICES OUTLET LOCATIONS WITH ELECTRICAL DRAWINGS.

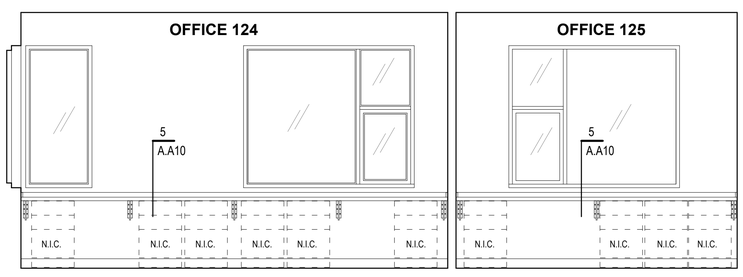

5 OFFICES 124 & 125 - ELEVATIONS

SCALE: 3/8" = 1'-0"

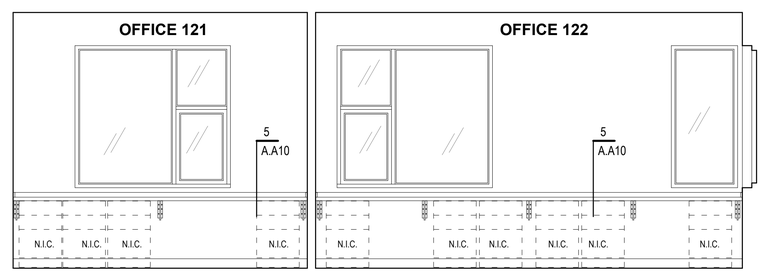

6 OFFICES 121 & 122 - ELEVATIONS

SCALE: 3/8" = 1'-0"

Winton Scott Architects

STATE OF MAINE
DEPARTMENT OF TRANSPORTATION

PROJECT NUMBER 01782.00

PIN 017820.00

		BY	DATE
PROJ. MANAGER	CRAIG MORIN		
DESIGN-DETAILED	ML	-	3/25/11
CHECKED-REVIEWED	SWW	-	-
DESIGN2-DETAILED2		-	-
DESIGN3-DETAILED3		-	-
REVISIONS 1		-	-
REVISIONS 2		-	-
REVISIONS 3		-	-
REVISIONS 4		-	-
FIELD CHANGES		-	-

SIGNATURE

P.E. NUMBER #793

DATE 3/25/11

PORTLAND INTERNATIONAL
MARINE TERMINAL IMPROVEMENTS
PORTLAND CUMBERLAND COUNTY

INTERIOR ELEVATIONS

SHEET NUMBER

A.A12

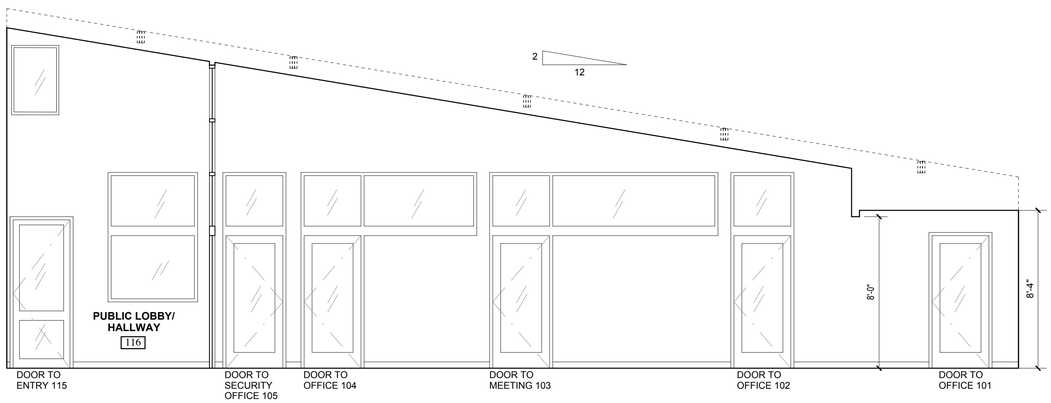

1 INTERIOR EAST ELEVATION OF HALLWAY 106

SCALE: 1/4" = 1'-0"

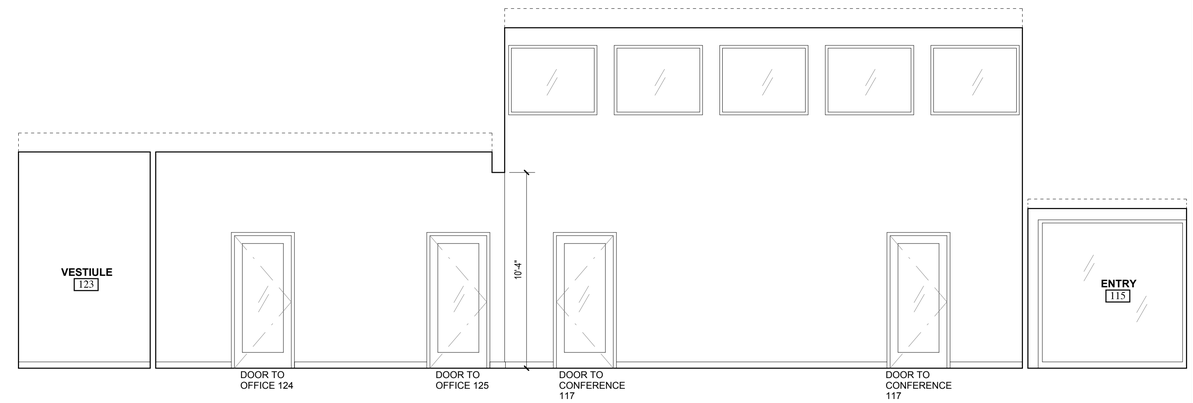

2 INTERIOR NORTH ELEVATION OF HALLWAY 116

SCALE: 1/4" = 1'-0"

NOTE:

COORDINATE ELECTRICAL & VOICES OUTLET LOCATIONS WITH ELECTRICAL DRAWINGS.

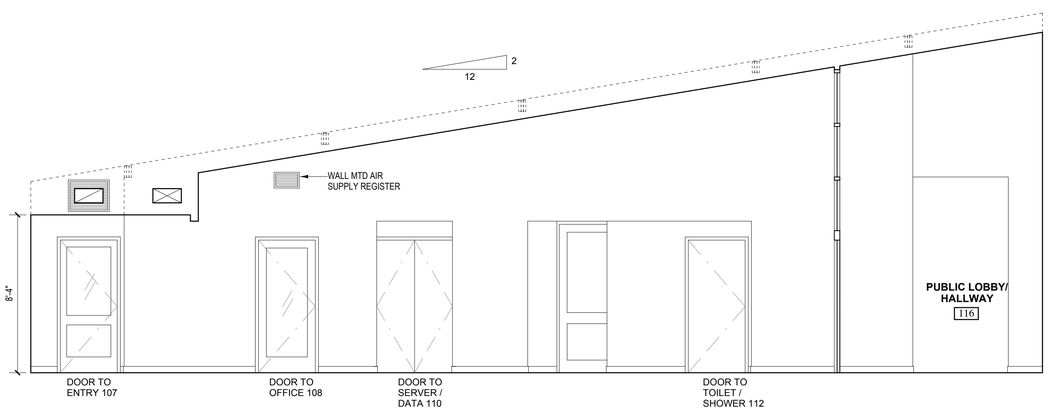

3 INTERIOR WEST ELEVATION OF HALLWAY 106

SCALE: 1/4" = 1'-0"

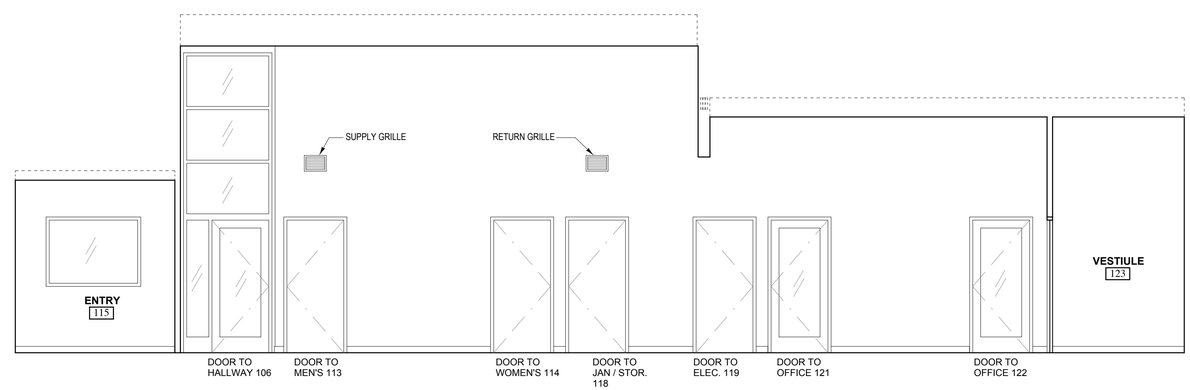

4 INTERIOR SOUTH ELEVATION OF HALLWAY 116

SCALE: 1/4" = 1'-0"

Winton Scott Architects

STATE OF MAINE
DEPARTMENT OF TRANSPORTATION

PROJECT NUMBER 01782.00

PIN
017820.00

REGISTERED ARCHITECT & ENGINEER WINTON R. SCOTT, JR. No. 793 STATE OF MAINE

PROJ. MANAGER	CRAIG MORIN	BY	DATE
DESIGN-DETAILED	- ML	-	3/25/11
CHECKED-REVIEWED	- SWW	-	-
DESIGN2-DETAILED2	-	-	-
DESIGN3-DETAILED3	-	-	-
REVISIONS 1	-	-	-
REVISIONS 2	-	-	-
REVISIONS 3	-	-	-
REVISIONS 4	-	-	-
FIELD CHANGES	-	-	-

SIGNATURE

P.E. NUMBER
#793

DATE:
3/25/11

PORTLAND INTERNATIONAL
MARINE TERMINAL IMPROVEMENTS
PORTLAND CUMBERLAND COUNTY

CORRIDOR ELEVATIONS

SHEET NUMBER

A.A13

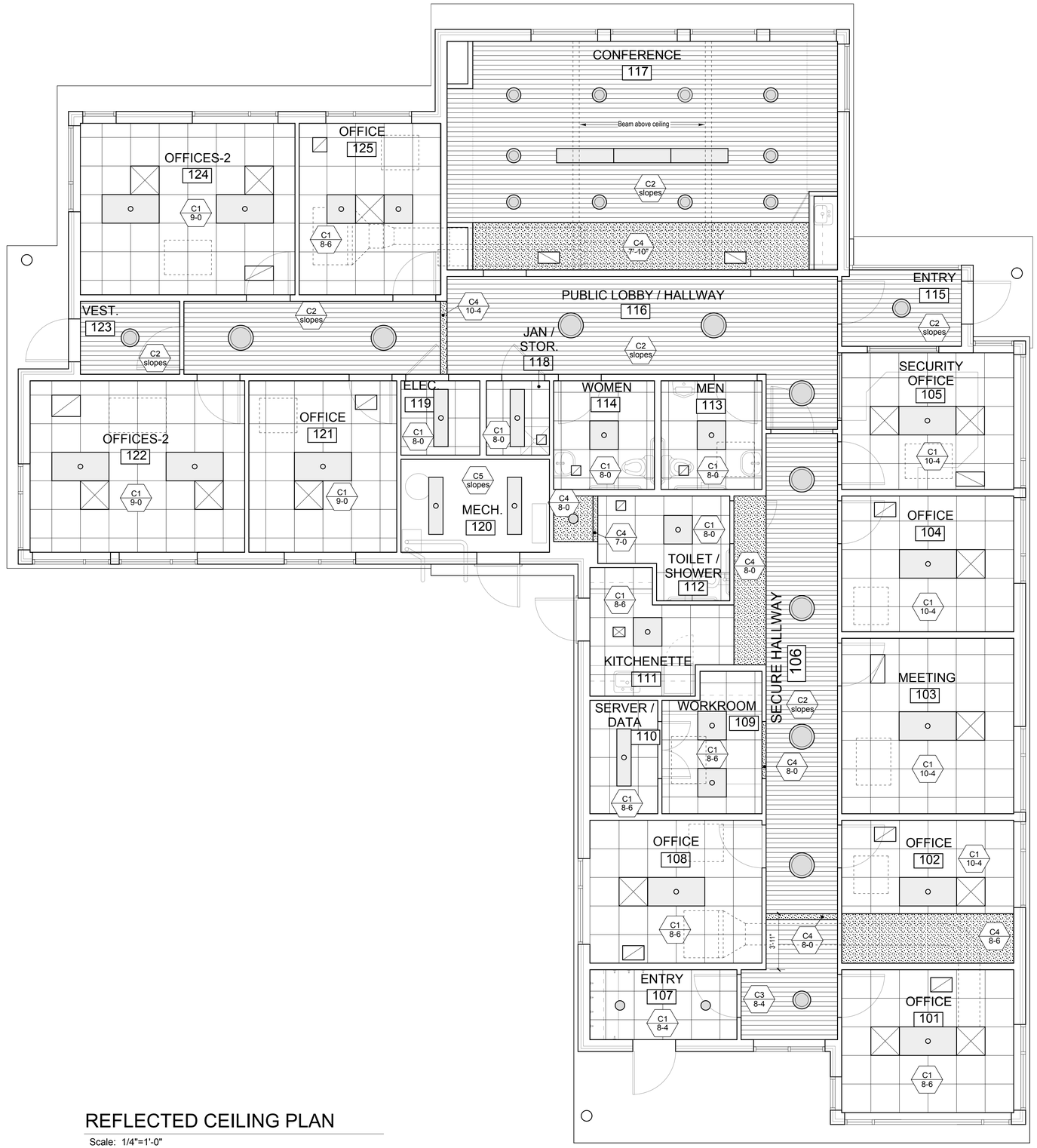

CEILING LEGEND

- C1 / 8'-0" — Indicates ceiling type; Indicates ceiling height from finish floor to underside of ceiling finish
- Suspended acoustical ceiling tiles. Use moisture resistant tiles in 112.
- Suspended wood ceiling, Woodworks Linear by Armstrong with Bioacoustic infill panels.
- Painted GWB soffit. Use MR boards in 112.

CEILING TYPES

C1	2'x2' suspended acoustical ceiling tiles. Use moisture resistant tiles in 112.
C2	Suspended wood ceiling angled to follow roof slope.
C3	Suspended wood ceiling, horizontal.
C4	Ptd GWB soffit. Use MR boards in 112.
C5	Exposed sloping S.I.P.S painted.

LIGHT FIXTURES LEGEND

FIXTURES ARE SHOWN FOR COORDINATION PURPOSES ONLY. LAYOUT IS NOT EXTENSIVE. REFER TO ELECTRICAL DRAWINGS AND SPECIFICATIONS FOR MORE DETAILS.

- RECESSED FLUORESCENT FIXTURE.
- RECESSED FLUORESCENT FIXTURE.
- RECESSED FLUORESCENT FIXTURE.
- PENDANT FLUORESCENT FIXTURE.
- RECESSED DOWNLIGHT FIXTURE.
- RECESSED DOWNLIGHT FIXTURE.
- PENDANT FIXTURE.
- PENDANT FIXTURE.

MECHANICAL LEGEND

EQUIPMENT IS SHOWN FOR COORDINATION PURPOSES ONLY. LAYOUT IS NOT EXTENSIVE. REFER TO MECHANICAL DRAWINGS AND SPECIFICATIONS FOR MORE DETAILS.

- AIR SUPPLY GRILLE OR EXHAUST REGISTER. SEE MECH.
- AIR RETURN GRILLE OR EXHAUST REGISTER. SEE MECH.
- AIR HANDLER ABOVE CEILING

REFLECTED CEILING PLAN

Scale: 1/4"=1'-0"

Winton Scott Architects

STATE OF MAINE
DEPARTMENT OF TRANSPORTATION

PROJECT NUMBER 01782.00

PIN 017820.00

	BY	DATE
PROJ. MANAGER	PAUL POTTLE	
DESIGN-DETAILED	- ML	3/25/11
CHECKED-REVIEWED	- SWW	-
DESIGN2-DETAILED2	-	-
DESIGN3-DETAILED3	-	-
REVISIONS 1	-	-
REVISIONS 2	-	-
REVISIONS 3	-	-
REVISIONS 4	-	-
FIELD CHANGES	-	-

SIGNATURE

P.E. NUMBER #793

DATE 3/25/11

PORTLAND INTERNATIONAL
MARINE TERMINAL IMPROVEMENTS
PORTLAND CUMBERLAND COUNTY

REFLECTED CEILING PLAN

SHEET NUMBER

A.A14

BECKER
STRUCTURAL ENGINEERS
75 York Street, Portland, Maine 04101
207.879.1838 ● beckerstructural.com

GENERAL NOTES

1. THE NOTES ON THESE DRAWINGS ARE NOT INTENDED TO REPLACE SPECIFICATIONS. SEE SPECIFICATIONS FOR REQUIREMENTS IN ADDITION TO GENERAL NOTES. INCONSISTENCIES BETWEEN THESE DRAWINGS AND THE SPECIFICATIONS SHALL BE BROUGHT TO THE ATTENTION OF THE ARCHITECT PRIOR TO PROCEEDING WITH THE AFFECTED PORTION OF THE WORK.

2. STRUCTURAL DRAWINGS SHALL BE USED IN CONJUNCTION WITH JOB SPECIFICATIONS AND ARCHITECTURAL, MECHANICAL, ELECTRICAL, PLUMBING, AND SITE DRAWINGS. CONSULT THESE DRAWINGS FOR LOCATIONS AND DIMENSIONS OF OPENINGS, CHASES, INSERTS, REGLETS, SLEEVES, DEPRESSIONS, AND OTHER DETAILS NOT SHOWN ON STRUCTURAL DRAWINGS.

3. ALL DIMENSIONS, EXISTING CONDITIONS, AND AS-BUILT CONDITIONS MUST BE VERIFIED IN THE FIELD. ANY DISCREPANCIES SHALL BE BROUGHT TO THE ATTENTION OF THE STRUCTURAL ENGINEER BEFORE PROCEEDING WITH THE AFFECTED PART OF THE WORK.

4. THE STRUCTURE IS DESIGNED TO BE SELF SUPPORTING AND STABLE ONLY AFTER THE STRUCTURAL WORK CONTAINED IN THE S- DRAWINGS IS COMPLETED. IT IS THE CONTRACTOR'S SOLE RESPONSIBILITY TO DETERMINE ERECTION PROCEDURES AND SEQUENCE TO ENSURE THE SAFETY OF THE BUILDING AND ITS COMPONENTS DURING ERECTION. THIS INCLUDES THE ADDITION OF NECESSARY SHORING, SHEETING, TEMPORARY BRACING, GUYS OR TIEDOWNS. SUCH MATERIAL SHALL REMAIN THE PROPERTY OF THE CONTRACTOR AFTER COMPLETION OF THE PROJECT.

5. SECTIONS AND DETAILS SHOWN ON ANY STRUCTURAL DRAWINGS SHALL BE CONSIDERED TYPICAL FOR SIMILAR CONDITIONS AS DETERMINED BY THE STRUCTURAL ENGINEER. THE STRUCTURAL ENGINEER RESERVES THE RIGHT TO INTERPRET DETAILS TO ADDRESS OTHER PROJECT CONDITIONS.

6. THE CONTRACTOR SHALL SUBMIT COMPLETE SHOP DRAWINGS FOR ALL PARTS OF THE WORK, INCLUDING DESCRIPTION OF SHORING, AND CONSTRUCTION METHODS AND SEQUENCING WHERE APPLICABLE. NO PERFORMANCE OF THE WORK INCLUDING, BUT NOT LIMITED TO, DEMOLITION OF EXISTING STRUCTURE, OR FABRICATION OR ERECTION OF NEW STRUCTURAL ELEMENTS, SHALL COMMENCE WITHOUT REVIEW OF THE SHOP DRAWINGS BY THE ARCHITECT AND ENGINEER. SUBMIT ONE COPY AND ONE SEPIA. COPY WILL BE REVIEWED AND SEPIA WILL BE RETURNED. FOR SHOP DRAWINGS AND SUBMITTALS REQUIRED, REFERENCE THE PROJECT SPECIFICATION.

7. ALL APPLICABLE FEDERAL, STATE, AND MUNICIPAL REGULATIONS SHALL BE FOLLOWED, INCLUDING THE FEDERAL DEPARTMENT OF LABOR OCCUPATIONAL SAFETY AND HEALTH ACT.

8. IN ACCORDANCE WITH THE INTERNATIONAL BUILDING CODE (2009 EDITION), A STATEMENT OF SPECIAL INSPECTIONS IS REQUIRED AS A CONDITION FOR PERMIT ISSUANCE BY THE LOCAL CODE OFFICIAL. THIS STATEMENT SHALL INCLUDE A COMPLETE LIST OF MATERIALS AND WORK REQUIRING SPECIAL INSPECTIONS, THE INSPECTIONS TO BE PERFORMED AND A LIST OF THE INDIVIDUALS, APPROVED AGENCIES AND FIRMS INTENDED TO BE RETAINED FOR CONDUCTING SUCH INSPECTIONS.

9. REFERENCE THE PROJECT SPECIFICATIONS FOR ALL TESTING REQUIREMENTS.

DESIGN LOADS

1. BUILDING CODE:
   MAINE UNIFORM BUILDING & ENERGY CODE
   INTERNATIONAL BUILDING CODE, 2009 EDITION
   ASCE 7-05 MINIMUM DESIGN LOADS FOR BUILDINGS AND OTHER STRUCTURES.

2. DESIGN FLOOR LIVE LOADS:
   ALL INTERIOR SPACES 100 PSF

3. DESIGN ROOF SNOW LOAD:
   GROUND SNOW LOAD (Pg): 60 PSF
   SNOW EXPOSURE FACTOR (Ce): 1.0
   SNOW LOAD IMPORTANCE FACTOR (Is): 1.0
   SNOW LOAD THERMAL FACTOR (Ct): 1.1
   FLAT ROOF SNOW LOAD (Pf): 46.2 PSF + DRIFT

4. DESIGN WIND LOAD:
   BASIC WIND SPEED: 100 MPH
   WIND LOAD IMPORTANCE FACTOR (Iw): 1.0
   WIND EXPOSURE: C
   INTERNAL PRESSURE COEFFICIENT: ±0.18
   COMPONENTS & CLADDING PER ASCE 7-05

5. DESIGN SEISMIC LOADS:
   EQUIVALENT LATERAL FORCE PROCEDURE
   SEISMIC OCCUPANCY CATEGORY: II
   SEISMIC IMPORTANCE FACTOR (Ie): 1.0
   MAPPED SPECTRAL RESPONSE ACCELERATIONS:
   Ss: 0.314
   S1: 0.077
   SEISMIC SITE CLASS: D
   SPECTRAL RESPONSE COEFFICIENTS:
   Sds: 0.324
   Sd1: 0.123
   SEISMIC DESIGN CATEGORY: B
   BASIC STRUCTURAL SYSTEM: BEARING WALL SYSTEM
   BASIC SEISMIC FORCE RESISTING SYSTEM:
   LIGHT FRAMED WALLS SHEATHED WITH WOOD STRUCTURAL PANELS
   RESPONSE MODIFICATION FACTOR (R): 6.5
   SEISMIC RESPONSE COEFFICIENT (Cs): X: 0.050

FOUNDATION NOTES (SOIL SUPPORTED)

1. FOUNDATIONS HAVE BEEN DESIGNED IN ACCORDANCE WITH A MEMORANDUM ENTITLED "GEOTECHNICAL DESIGN MEMORANDUM, PROPOSED OFFICE BUILDING, PORTLAND INTERNATIONAL MARINE TERMINAL IMPROVEMENTS, PORTLAND, MAINE, PIN:17820", PREPARED BY HALEY & ALDRICH, INC., DATED 1/7/2011. THE RECOMMENDATIONS OF THE REPORT ARE PART OF THIS WORK.

2. FOUNDATION DESIGN IS BASED ON SHALLOW SPREAD FOOTINGS BEARING ON A LAYER OF COMPACTED GRANULAR FILL OVER SUITABLE UNDISTURBED NATIVE SOILS PER THE REQUIREMENTS OF THE ABOVE NOTED MEMORANDUM.

3. ALLOWABLE BEARING CAPACITY 500 PSF

4. EXTEND BOTTOM OF EXTERIOR FOOTINGS AT LEAST 4.5 FEET BELOW THE FINAL EXTERIOR GRADE FOR PROTECTION AGAINST FROST.

5. NO FILL FOR BUILDING SUPPORT SHALL BE PLACED UNTIL UPGRADES HAVE BEEN OBSERVED AND APPROVED BY THE GEOTECHNICAL ENGINEER.

6. REFERENCE THE SECTION 31 20 00 FOR ALL EXCAVATION, BACKFILL, COMPACTION, CONSTRUCTION DEWATERING AND PERMANENT DRAINAGE REQUIREMENTS.

7. SOILS EXPOSED AT THE BASE OF ALL SATISFACTORY FOUNDATION EXCAVATIONS SHOULD BE PROTECTED AGAINST ANY DETRIMENTAL CHANGE IN CONDITION, SUCH AS DISTURBANCE FROM RAIN OR FROST. SURFACE RUNOFF SHOULD BE DRAINED AWAY FROM THE EXCAVATIONS AND NOT BE ALLOWED TO POND. FOUNDATION EXCAVATIONS SHOULD BE ADEQUATELY PROTECTED FROM RAINFALL OR FREEZING CONDITIONS. GROUNDWATER SHOULD BE ANTICIPATED FOR EXCAVATIONS AND APPROPRIATE DEWATERING MEASURES SHALL BE EMPLOYED.

8. EXCAVATIONS FOR BUILDING CONSTRUCTION SHALL BE IN ACCORDANCE WITH OSHA REQUIREMENTS. BRACED EXCAVATIONS SHALL BE DESIGNED BY A PROFESSIONAL ENGINEER REGISTERED IN THE STATE OF MAINE. DO NOT UNDERMINE EXISTING FOUNDATIONS OF ANY ADJACENT STRUCTURES. REFER TO THE GEOTECHNICAL REPORT FOR ADDITIONAL AND/OR MORE SPECIFIC REQUIREMENTS.

CONCRETE NOTES

1. CONCRETE WORK SHALL CONFORM TO "ACI MANUAL OF CONCRETE PRACTICE", LATEST EDITION. THIS PUBLICATION IS AVAILABLE THROUGH THE AMERICAN CONCRETE INSTITUTE (248) 848-3800.

2. ALL CONCRETE SHALL HAVE A 28-DAY COMPRESSIVE STRENGTH OF 3,000 PSI, U.N.O. EXTERIOR SLAB-ON-GRADE SHALL HAVE A 28-DAY COMPRESSIVE STRENGTH OF 4,500 PSI. ADDITIONAL CONCRETE MIX PERFORMANCE DATA INCLUDING AIR CONTENT, WATER-CEMENT RATIO, AGGREGATE SIZE, SLUMP, ETC. HAS BEEN INCLUDED IN THE PROJECT SPECIFICATIONS. SEE THE SPECIFICATIONS FOR ADDITIONAL REQUIREMENTS.

3. CONCRETE SHALL NOT BE PLACED IN WATER OR ON FROZEN GROUND.

4. PROVIDE PVC SLEEVES WHERE PIPES PASS THROUGH EXTERIOR CONCRETE, OR SLABS.

5. REINFORCING BARS SHALL CONFORM TO ASTM A615 GRADE 60 DEFORMED BARS AND SHALL BE DETAILED, FABRICATED AND PLACED IN ACCORDANCE WITH ACI 315, LATEST EDITION.

6. WELDED WIRE FABRIC SHALL CONFORM TO ASTM A-185 AND BE PROVIDED IN FLAT SHEETS.

7. MINIMUM CONCRETE PROTECTIVE COVERING FOR REINFORCEMENT, UNLESS NOTED OTHERWISE, SHALL BE AS FOLLOWS:

   A.SURFACES CAST AGAINST AND PERMANENTLY IN CONTACT WITH EARTH, 3.0"
   B.FORMED SURFACES IN CONTACT WITH EARTH OR EXPOSED TO WEATHER
   #5 BARS, 5/8" DIAMETER WIRE AND SMALLER, 1.5"
   #6 THROUGH #11 BARS, 2.0"

8. REINFORCEMENT SHALL BE CONTINUOUS AROUND CORNERS AND AT INTERSECTIONS. PROVIDE LAPPED BARS AT NECESSARY SPLICES OR HOOKED BARS AT DISCONTINUOUS ENDS. PROVIDE TENSION LAP SPLICES PER THE SCHEDULE D RAWING S4, FOR ALL REINFORCING UNLESS OTHERWISE SHOWN ON PLAN.

9. WELDING OF REINFORCEMENT IS NOT PERMITTED

10. FOR ALL OPENINGS IN CONCRETE WALLS AND SLABS, PROVIDE SUPPLEMENTAL REINFORCING AROUND OPENING AS SHOWN ON THE CONTRACT DOCUMENTS TYPICAL DETAILS. NO PENETRATIONS SHALL BE MADE THROUGH FOOTINGS WITHOUT WRITTEN PERMISSION FROM ENGINEER.

11. CONSTRUCTION JOINTS ARE SHOWN ON DRAWINGS ARE MANDATORY. OMISSIONS, ADDITIONS, OR CHANGES SHALL NOT BE MADE EXCEPT WITH THE SUBMITTAL OF A WRITTEN REQUEST TOGETHER WITH DRAWINGS OF THE PROPOSED JOINT LOCATIONS FOR APPROVAL OF THE STRUCTURAL ENGINEER. WHERE CONSTRUCTION JOINTS ARE NOT SHOWN, OR WHEN ALTERNATE LOCATIONS ARE PROPOSED, DRAWINGS SHOWING LOCATION OF CONSTRUCTION AND CONTROL JOINTS AND CONCRETE PLACING SEQUENCE SHALL BE SUBMITTED TO THE STRUCTURAL ENGINEER FOR REVIEW PRIOR TO PREPARATION OF THE REINFORCEMENT SHOP DRAWINGS. CONCRETE SHALL BE PLACED WITHOUT HORIZONTAL CONSTRUCTION JOINTS EXCEPT WHERE SHOWN OR NOTED. VERTICAL CONSTRUCTION JOINTS AND STOPS IN CONCRETE BEAMS/ GRADE BEAMS SHALL BE MADE AT MIDSPAN OR AT POINTS OF MINIMUM SHEAR, UNLESS NOTED OTHERWISE.

12. SPACING OF CONSTRUCTION JOINTS, UNLESS NOTED OTHERWISE SHALL BE AS FOLLOWS:
    A.FOOTINGS AND WALLS
    MAX LENGTH 40'-0" NOR 15'-0" FROM ANY CORNER**
    B.SLABS ON GRADE
    SEE FOUNDATION PLAN

    ** EXCEED ONLY WHERE INTERMEDIATE CONTRACTION JOINTS ARE PROVIDED. MINIMUM OF 72 HOURS SHALL ELAPSE BETWEEN ADJACENT CONCRETE PLACEMENTS.

13. ANCHOR RODS SHALL BE HEADED RODS CONFORMING TO ASTM F1554, GRADE 36 KSI WELDABLE STEEL, UNLESS NOTED OTHERWISE ON DRAWINGS. ANCHOR RODS T THAT ARE TO BE IN CONTACT WITH PRESSURE TREATED LUMBER SHALL BE HOT-DIPPED GALVANIZED.

14. SLAB THICKNESSES INDICATED ON THE DRAWINGS ARE MINIMUMS. PROVIDE SUFFICIENT CONCRETE TO ACCOUNT FOR SUBGRADE FLUCTUATIONS, AND TO OBTAIN THE SPECIFIED SLAB ELEVATION AT THE FLATNESS AND LEVELNESS INDICATED.

15. INSTALLATION OF REINFORCEMENT SHALL BE COMPLETED AT LEAST 24 HOURS PRIOR TO THE SCHEDULED CONCRETE PLACEMENT. NOTIFY ARCHITECT AND STRUCTURAL ENGINEER OF COMPLETION AT LEAST 24 HOURS PRIOR TO THE SCHEDULED COMPLETION OF THE INSTALLATION OF REINFORCEMENT.

16. ALL ITEMS TO BE EMBEDDED INTO CONCRETE SHALL BE INSTALLED PRIOR TO PLACEMENT OF CONCRETE. PROVIDE ADDITIONAL REINFORCEMENT AND/OR TEMPLATES AS REQUIRED TO ENSURE THE CORRECT POSITIONS OF EMBEDMENTS. "WET SETTING" OF EMBEDMENTS INTO CONCRETE IS STRICTLY PROHIBITED. EMBEDMENTS INCLUDE, BUT NOT BY LIMITATION, REINFORCEMENT, REINFORCING DOWELS, EMBEDDED PLATES, ANCHOR RODS, ANCHOR INSERTS, SLEEVES, AND SHELF BULK HEADS.

TIMBER NOTES

1. ALL TIMBER FRAMING SHALL BE IN ACCORDANCE WITH THE AITC TIMBER CONSTRUCTION MANUAL- LATEST EDITION, AND THE AF & PA NATIONAL DESIGN SPECIFICATION FOR WOOD CONSTRUCTION (NDS) LATEST EDITION.

2. INDIVIDUAL TIMBER FRAMING MEMBERS SHALL BE VISUALLY GRADED. MINIMUM GRADE NO1/NO2 SPRUCE-PINE-FIR KILN DRIED TO 19% MAXIMUM MOISTURE CONTENT UNLESS OTHERWISE INDICATED ON THE DRAWINGS.

3. ENGINEERED WOOD PRODUCTS SHALL BE AS SPECIFIED ON THE DRAWINGS. REFER TO MANUFACTURER'S LITERATURE FOR PROPER HANDLING AND INSTALLATION GUIDELINES. MANUFACTURER AND PRODUCT SHALL BE:

   I-LEVEL: MICROLAM (LVL),
   BOISE: VERSALAM (LVL)

4. PRESSURE TREATED LUMBER SHALL BE USED FOR SILL MEMBERS, EXTERIOR EXPOSURE, OR WHERE SHOWN ON THE DRAWINGS. TIMBER SHALL BE SOUTHERN YELLOW PINE TREATED WITH CCA OR ACQ TO 0.4 #/CF IN ACCORDANCE WITH AWPA C-18. ACZA IS STRICTLY PROHIBITED.

5. ALL WALL SHEATHING SHALL BE APA PERFORMANCE-RATED. SHEATHING SHALL BE NAILED TO THE FRAMING AS FOLLOWS, U.N.O. AT SHEARWALLS: 8d NAILS AT 6" O.C. AT SUPPORTED PANEL EDGES AND 12" O.C. AT INTERMEDIATE SUPPORTS.

6. ROOF STRUCTURAL INSULATED PANELS (SIPS) SHALL BE 6 1/2" WITH INSULATED I-BEAM SPLINE AS MANUFACTURED BY R-CONTROL (OR PRE-APPROVED EQUIVALENT). SCREW FASTENED PER MANUFACTURER'S RECOMMENDATIONS. SEE SPECIFICATION FOR ADDITIONAL INFORMATION.

7. ALL BUILT-UP BEAMS AND COLUMNS SHALL BE NAILED AS FOLLOWS (FASTENING IN EACH PLY):

   UNIFORMLY LOADED BEAMS:
   BEAM DEPTH <16" - 2 ROWS OF 16d NAILS AT 12" O.C., STAGGERED
   BEAM DEPTH >=16" - 3 ROWS OF 16d NAILS AT 12" O.C. STAGGERED
   NOTE: SIDE LOADED BEAMS REQUIRE ADDITIONAL FASTENING. SEE DETAILS.

   COLUMNS:
   2-10d NAILS AT 6" O.C.

8. FASTENING NOT SPECIFIED SHALL CONFORM WITH IBC TABLE 2304.9.1. NAIL FASTENERS SHALL MEET THE REQUIREMENTS OF ASTM F1667. UNLESS NOTED OTHERWISE, NAILS REFERENCED ON DRAWINGS ARE TO BE COMMON NAILS WITH DIMENSIONS AS FOLLOWS.

   6d: 2" LONG BY 0.113" DIAMETER SHANK WITH 0.266" DIAMETER HEAD
   8d: 2 ½" LONG BY 0.131" DIAMETER SHANK WITH 0.281" DIAMETER HEAD
   10d: 3" LONG BY 0.148" DIAMETER SHANK WITH 0.312" DIAMETER HEAD
   12d: 3 ¼" LONG BY 0.148" DIAMETER SHANK WITH 0.312" DIAMETER HEAD
   16d: 3 ½" LONG BY 0.162" DIAMETER SHANK WITH 0.344" DIAMETER HEAD
   20d: 4" LONG BY 0.192" DIAMETER SHANK WITH 0.406" DIAMETER HEAD
   30d: 4 ½" LONG BY 0.207" DIAMETER SHANK WITH 0.438" DIAMETER HEAD

9. ALL TIMBER CONNECTION HARDWARE (JOIST HANGERS, POST BASES, SHEARWALL HOLDOWNS, ETC) SHALL BE AS INDICATED ON THE DRAWINGS AND MANUFACTURED BY SIMPSON STRONG-TIE. ALL CONNECTION HARDWARE SHALL BE HOT-DIPPED GALVANIZED G-90 (U.N.O.). CONNECTION HARDWARE USED IN CONJUNCTION WITH PRESERVATIVE TREATMENT SHALL BE GALVANIZED G185 (ZMAX) USE FASTENERS AND HANGERS OF SAME MATERIAL & COATING. REFER TO MANUFACTURER'S LITERATURE FOR PROPER HANDLING AND INSTALLATION GUIDELINES.

10. FASTENERS USED IN CONJUNCTION WITH PT LUMBER, BUT NOT AT TIMBER CONNECTION HARDWARE REFERENCED IN NOTE ABOVE, SHALL BE POST HOT-DIPPED GALVANIZED (ASTM A153).

STATE OF MAINE
DEPARTMENT OF TRANSPORTATION

PROJECT NUMBER 017820.00

PIN
17820.00

STATE OF MAINE
PAUL D. BECKER
NO. 6554
LICENSED
PROFESSIONAL ENGINEER

PROJ. MANAGER	CRAIG R. MORIN	BY	DATE
DESIGN-DETAILED	DSB	APP	3/25/11
CHECKED-REVIEWED	DSB	EAR	3/25/11
DESIGN2-DETAILED2	-	-	-
DESIGN3-DETAILED3	-	-	-
REVISIONS 1	-	-	-
REVISIONS 2	-	-	-
REVISIONS 3	-	-	-
REVISIONS 4	-	-	-
FIELD CHANGES	-	-	-

SIGNATURE
ME 6554
P.E. NUMBER
3.25.2011
DATE

PORTLAND INTERNATIONAL
MARINE TERMINAL IMPROVEMENTS
PORTLAND CUMBERLAND COUNTY

GENERAL NOTES

SHEET NUMBER
A.S1

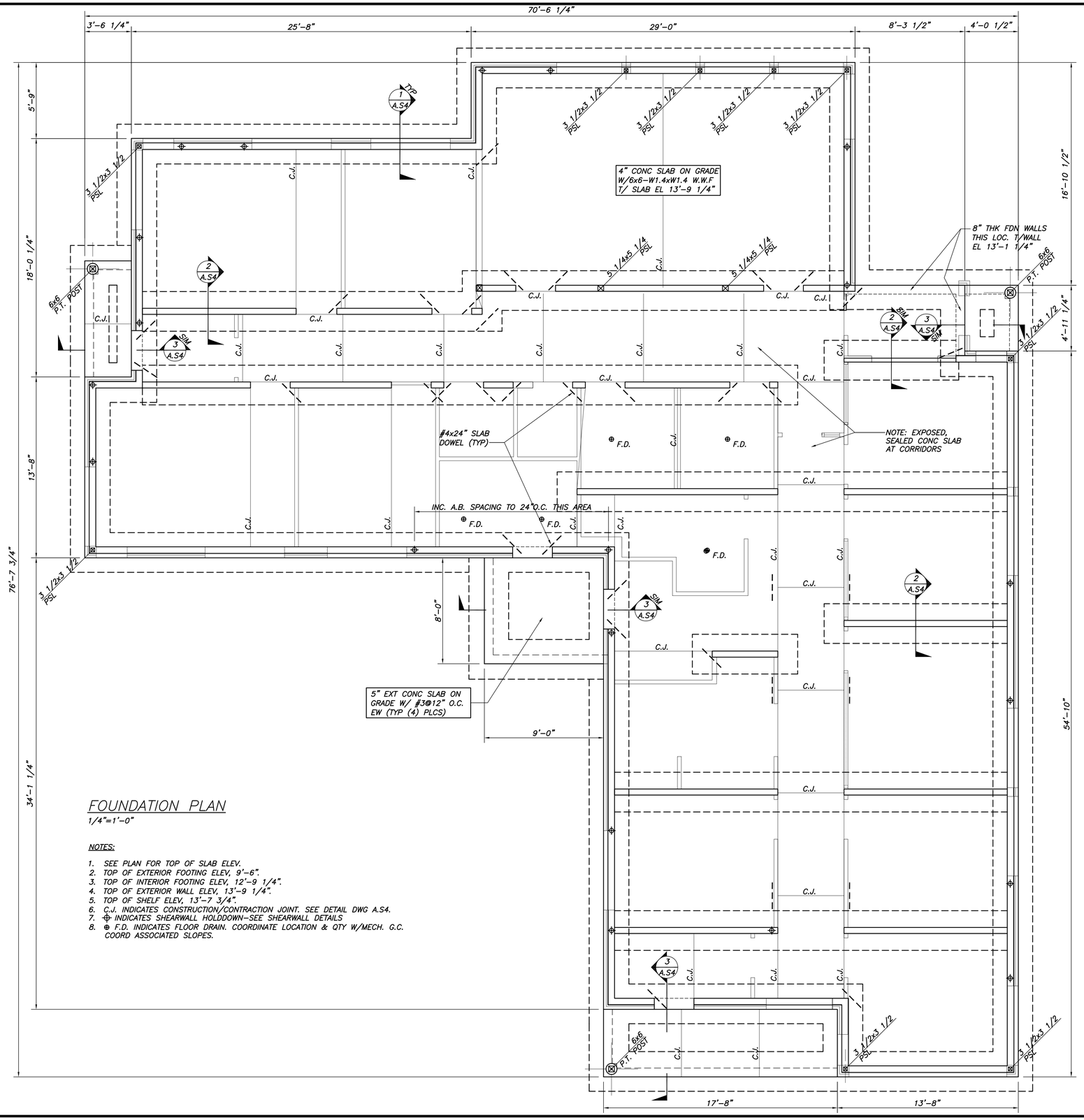

FOUNDATION PLAN

1/4"=1'-0"

NOTES:

1. SEE PLAN FOR TOP OF SLAB ELEV.
2. TOP OF EXTERIOR FOOTING ELEV, 9'-6".
3. TOP OF INTERIOR FOOTING ELEV, 12'-9 1/4".
4. TOP OF EXTERIOR WALL ELEV, 13'-9 1/4".
5. TOP OF SHELF ELEV, 13'-7 3/4".
6. C.J. INDICATES CONSTRUCTION/CONTRACTION JOINT. SEE DETAIL DWG A.S4.
7. ⊕ INDICATES SHEARWALL HOLDDOWN-SEE SHEARWALL DETAILS
8. ⊕ F.D. INDICATES FLOOR DRAIN. COORDINATE LOCATION & QTY W/MECH. G.C. COORD ASSOCIATED SLOPES.

BECKER STRUCTURAL ENGINEERS
75 York Street, Portland, Maine 04101
207.879.1838 ■ beckerstructural.com

STATE OF MAINE
DEPARTMENT OF TRANSPORTATION

PROJECT NUMBER 017820.00

PIN 17820.00

STATE OF MAINE PAUL R. BECKER NO. 6554 LICENSED PROFESSIONAL ENGINEER

ME 6554
P.E. NUMBER

3.25.2011
DATE

PROJ. MANAGER	CRAIG R. MORIN	BY	DATE
DESIGN-DETAILED	DSB	APP	3/25/11
CHECKED-REVIEWED	DSB	EAR	3/25/11
DESIGN2-DETAILED2	-	-	-
DESIGN3-DETAILED3	-	-	-
REVISIONS 1	-	-	-
REVISIONS 2	-	-	-
REVISIONS 3	-	-	-
REVISIONS 4	-	-	-
FIELD CHANGES	-	-	-

PORTLAND INTERNATIONAL
MARINE TERMINAL IMPROVEMENTS
PORTLAND CUMBERLAND COUNTY

FOUNDATION PLAN

SHEET NUMBER

A.S2

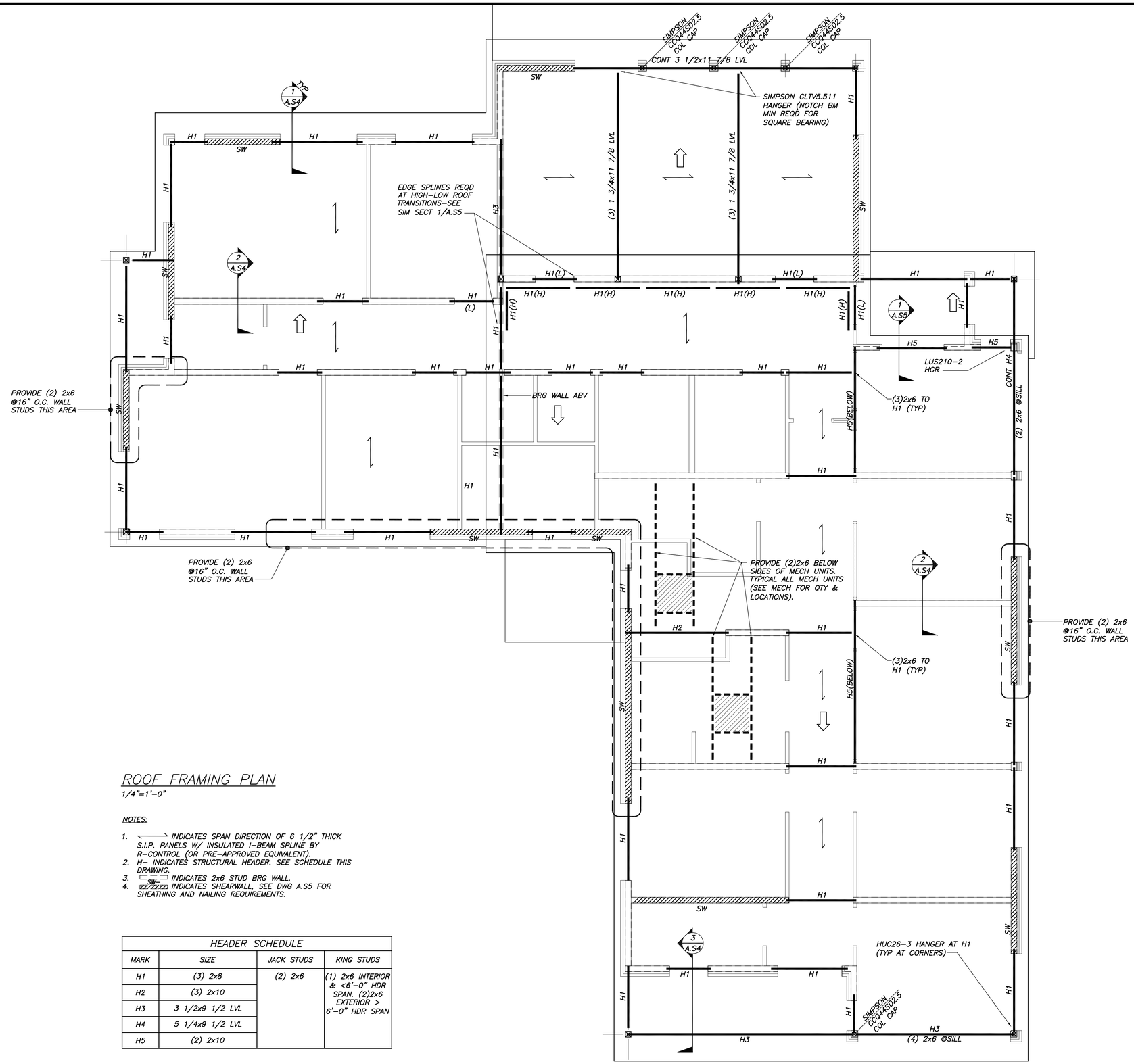

ROOF FRAMING PLAN

1/4"=1'-0"

NOTES:

1. INDICATES SPAN DIRECTION OF 6 1/2" THICK S.I.P. PANELS W/ INSULATED I-BEAM SPLINE BY R-CONTROL (OR PRE-APPROVED EQUIVALENT).
2. H- INDICATES STRUCTURAL HEADER. SEE SCHEDULE THIS DRAWING.
3. INDICATES 2x6 STUD BRG WALL.
4. SW INDICATES SHEARWALL. SEE DWG A.S5 FOR SHEATHING AND NAILING REQUIREMENTS.

HEADER SCHEDULE

MARK	SIZE	JACK STUDS	KING STUDS
H1	(3) 2x8	(2) 2x6	(1) 2x6 INTERIOR & <6'-0" HDR SPAN. (2)2x6 EXTERIOR > 6'-0" HDR SPAN
H2	(3) 2x10		
H3	3 1/2x9 1/2 LVL		
H4	5 1/4x9 1/2 LVL		
H5	(2) 2x10		

BECKER STRUCTURAL ENGINEERS
75 York Street, Portland, Maine 04101
207.879.1838 ● beckerstructural.com

STATE OF MAINE
DEPARTMENT OF TRANSPORTATION

PROJECT NUMBER 017820.00

PIN 17820.00

STATE OF MAINE PAUL R. BECKER NO. 6554 LICENSED PROFESSIONAL ENGINEER

ME 6554
P.E. NUMBER

3.25.2011
DATE

		BY	DATE
PROJ. MANAGER	CRAIG R. MORIN		
DESIGN-DETAILED	DSB	APP	3/25/11
CHECKED-REVIEWED	DSB	EAR	3/25/11
DESIGN2-DETAILED2	-	-	-
DESIGN3-DETAILED3	-	-	-
REVISIONS 1	-	-	-
REVISIONS 2	-	-	-
REVISIONS 3	-	-	-
REVISIONS 4	-	-	-
FIELD CHANGES	-	-	-

PORTLAND INTERNATIONAL
MARINE TERMINAL IMPROVEMENTS
PORTLAND CUMBERLAND COUNTY

ROOF FRAMING PLAN

SHEET NUMBER

A.S3

BECKER
STRUCTURAL ENGINEERS
75 York Street, Portland, Maine 04101
207.879.1838 ● beckerstructural.com

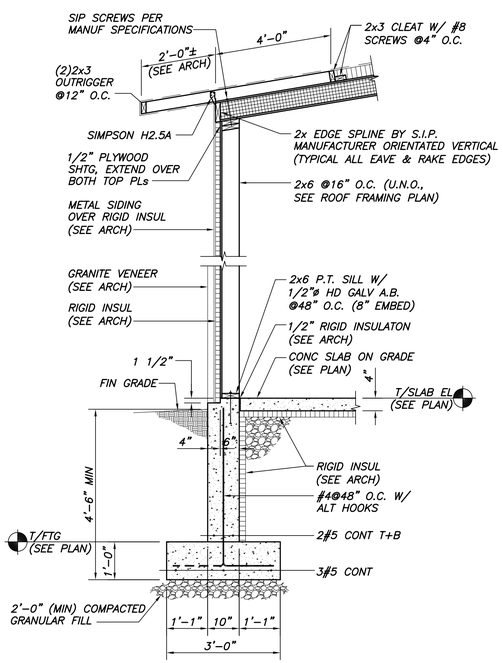

SECTION 1
1/2"=1'-0" A.S2-A.S3

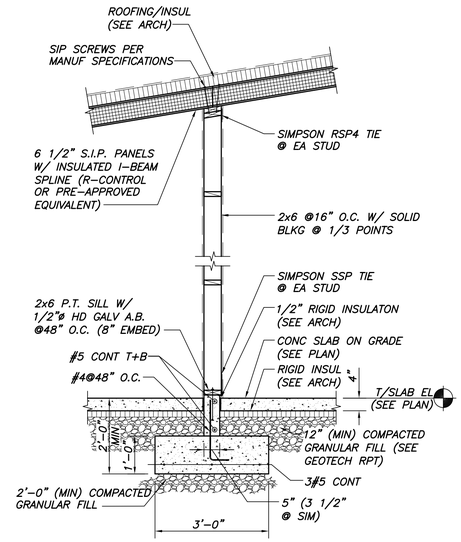

SECTION 2
1/2"=1'-0" A.S2-A.S3

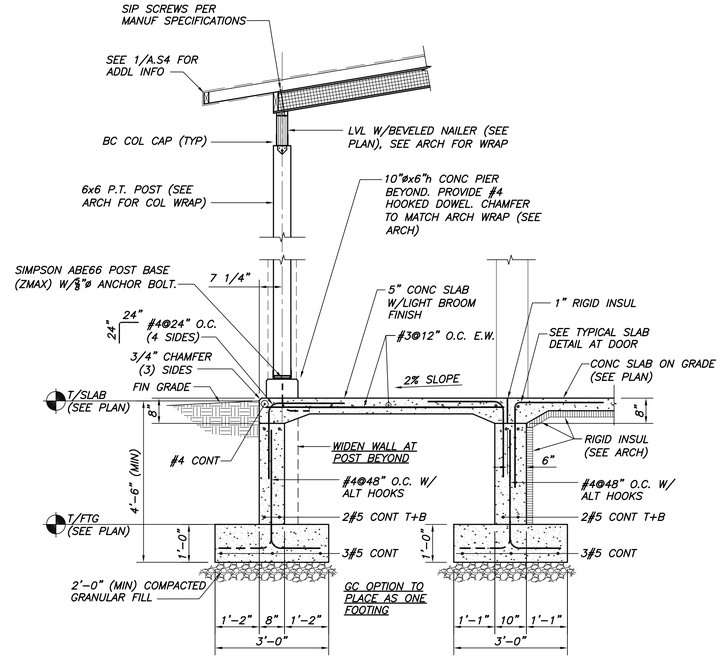

SECTION 3
1/2"=1'-0" A.S2-A.S3

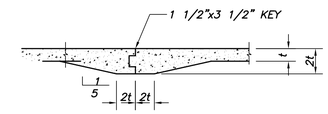

TYP SLAB ON GRADE CONST JOINT DETAIL
N.T.S. t = SLAB THICKNESS

REBAR LAP SPLICE TABLE		
BAR SIZE	LAP LENGTH	
	3,000 PS1	4,000 PS1
#3	30"	24"
#4	36"	32"
#5	48"	42"

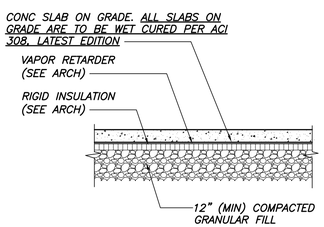

TYP SLAB DETAIL
N.T.S.

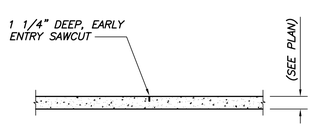

TYP SLAB ON GRADE CONTRACTION JOINT DETAIL
N.T.S.

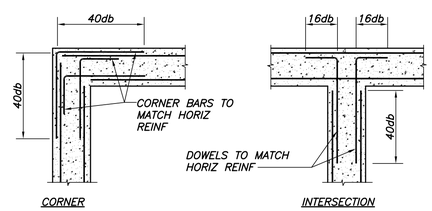

TYP WALL REINF DETAILS
N.T.S.

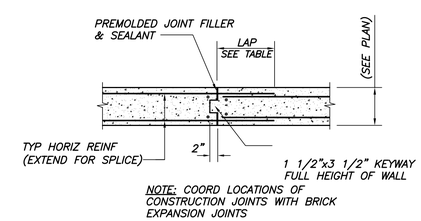

TYP CONSTRUCTION JOINT IN WALL
N.T.S.

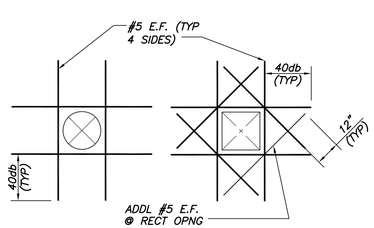

TYP OPENING IN WALL OR SLAB DETAIL
N.T.S.

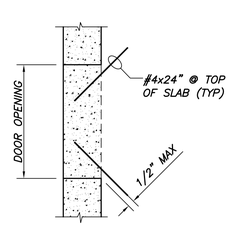

NOTE: ALSO PROVIDE #4x24" (TOP) IN SLAB @ INSIDE RE-ENTRANT CORNERS (SEE PLAN)

TYP SLAB CORNER DETAIL @ DOOR
N.T.S.

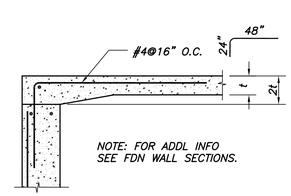

TYP SLAB DETAIL @ DOOR
N.T.S. t = SLAB THICKNESS

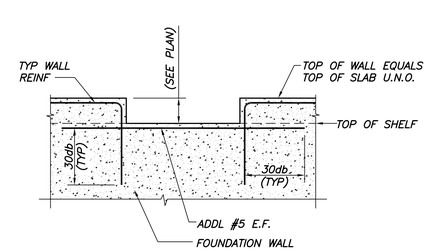

TYP WALL DEPRESSION DETAIL @ DOOR
N.T.S.

STATE OF MAINE
DEPARTMENT OF TRANSPORTATION

PROJECT NUMBER 017820.00

PIN 17820.00

STATE OF MAINE PAUL D. BECKER NO. 6554 LICENSED PROFESSIONAL ENGINEER

SIGNATURE		
ME 6554		
P.E. NUMBER		
3.25.2011		
DATE		

PROJ. MANAGER	CRAIG R. MORIN	BY	DATE
DESIGN1-DETAILED	DSB	APP	3/25/11
CHECKED-REVIEWED	DSB	EAR	3/25/11
DESIGN2-DETAILED2	-	-	-
DESIGN3-DETAILED3	-	-	-
REVISIONS 1	-	-	-
REVISIONS 2	-	-	-
REVISIONS 3	-	-	-
REVISIONS 4	-	-	-
FIELD CHANGES	-	-	-

PORTLAND INTERNATIONAL
MARINE TERMINAL IMPROVEMENTS
PORTLAND CUMBERLAND COUNTY

SECTIONS AND DETAILS I

SHEET NUMBER
A.S4

BECKER
STRUCTURAL ENGINEERS
75 York Street, Portland, Maine 04101
207.879.1838 ● beckerstructural.com

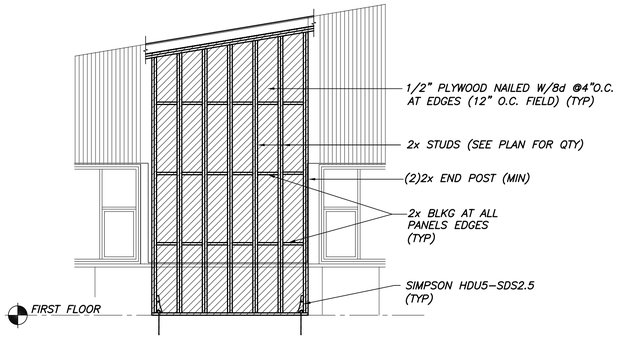

SCHEMATIC PARTIAL SHEARWALL ELEVATION

1/4"=1'-0"

WOOD STUD SHEARWALL NOTES:

1. PLYWOOD SHEAR PANELS SHALL BE SINGLE SIDED MINIMUM 1/2" APA RATED SHEATHING PANELS
2. PLYWOOD TO BE PLACED WITH FACE GRAIN PERPENDICULAR TO STUDS.
3. USE 4'-0"x8'-0" PLYWOOD SHEETS WHERE POSSIBLE.
4. MINIMUM WIDTH OF PLYWOOD SHEET IS 2'-0".
5. SHEARWALL ELEVATIONS ARE INTENDED TO DETAIL SHEARWALL ELEMENTS ONLY. FRAMING SHOWN MAY NOT REFLECT ALL BUILDING COMPONENTS AT THE SHEARWALL AREA.
6. COORDINATE SHEARWALL DIMENSIONS AND LOCATIONS WITH ARCHITECTURAL DRAWINGS.
7. HOLES ARE ALLOWED IN PLYWOOD SHEARWALLS AS SHOWN ON THE DRAWINGS (SEE ARCHITECTURAL DRAWINGS).
8. PROVIDE "2x" BLOCKING (SEE ELEVATIONS) AS NAILING SURFACE AT UNSUPPORTED PANEL EDGES. BLOCK ALL PANEL EDGES.
9. 3/8" MINIMUM EDGE DISTANCE AT ANY NAILED CONNECTION.
10. SHEARWALL HOLD DOWNS SHALL BE AS SPECIFIED, MANUFACTURED BY SIMPSON STRONG-TIE COMPANY, INC. SHEARWALL HOLD DOWN ANCHORS SHALL BE "EPOXY-TIE" ADHESIVE ANCHORS BY SIMPSON STRONG-TIE COMPANY, INC. THREADED ROD SHALL BE ASTM 1554 (MIN) OF SIZE AND EMBEDMENT AS SPECIFIED. MINIMUM CONCRETE EDGE DISTANCE SHALL BE 2 3/4" FROM CENTERLINE OF BOLT..

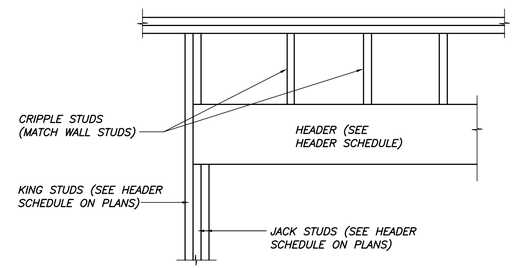

TYP HEADER DETAIL

N.T.S.

NOTE: PROVIDE INSULATION WITHIN HEADERS IN EXTERIOR WALLS WHERE (2)2x OR (2) LVLs ARE SPECIFIED. COORDINATE REQUIREMENTS WITH ARCH.

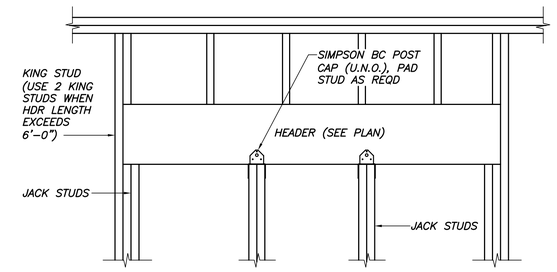

(3 SPAN SHOWN, OTHERS SIMILAR)

MULTI-SPAN CONTINUOUS HEADER DETAIL

N.T.S.

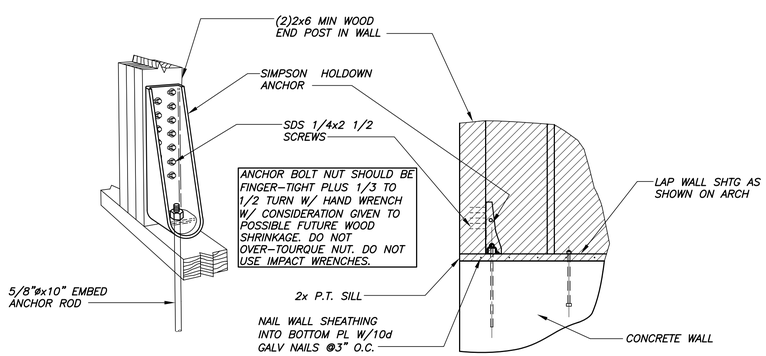

ELEVATION

TYP HOLDOWN DETAIL AT FDN WALL

N.T.S.

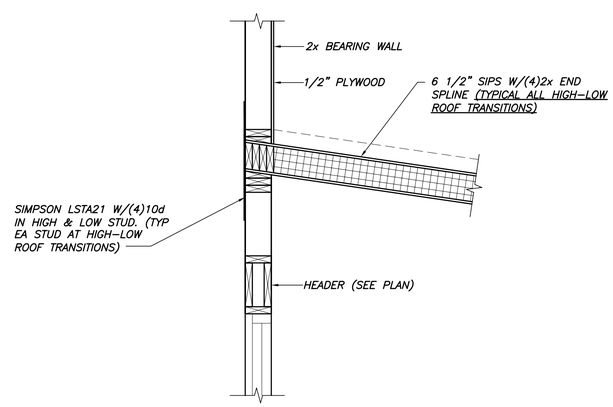

SECTION 1 / A.S2

3/4"=1'-0"

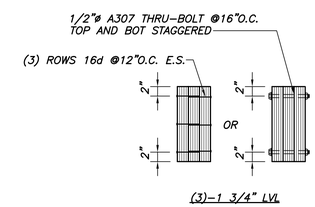

(SOLID LVL MEMBERS WITH EQUIVALENT MULTI PLY WIDTHS MAY BE USED)

TYP "BUILT-UP" LVL DETAIL, U.N.O.

N.T.S.

STATE OF MAINE
DEPARTMENT OF TRANSPORTATION

PROJECT NUMBER 017820.00

PIN 17820.00

STATE OF MAINE PAUL D. BECKER NO. 6554 LICENSED PROFESSIONAL ENGINEER

PROJ. MANAGER	CRAIG R. MORIN	BY	DATE
DESIGN-DETAILED	DSB	APP	3/25/11
CHECKED-REVIEWED	DSB	EAR	3/25/11
DESIGN2-DETAILED2	-	-	-
DESIGN3-DETAILED3	-	-	-
REVISIONS 1	-	-	-
REVISIONS 2	-	-	-
REVISIONS 3	-	-	-
REVISIONS 4	-	-	-
FIELD CHANGES	-	-	-

SIGNATURE

ME 6554
P.E. NUMBER

3.25.2011
DATE

PORTLAND INTERNATIONAL
MARINE TERMINAL IMPROVEMENTS
PORTLAND CUMBERLAND COUNTY

SECTIONS AND DETAILS II

SHEET NUMBER

A.S5

MECHANICAL SYSTEMS ENGINEERS
ROYAL RIVER CENTER, UNIT #10
10 FOREST FALLS DRIVE
YARMOUTH, MAINE 04096
207-846-1441
© COPYRIGHT 2011
M.S.E. Proj. 1032

N

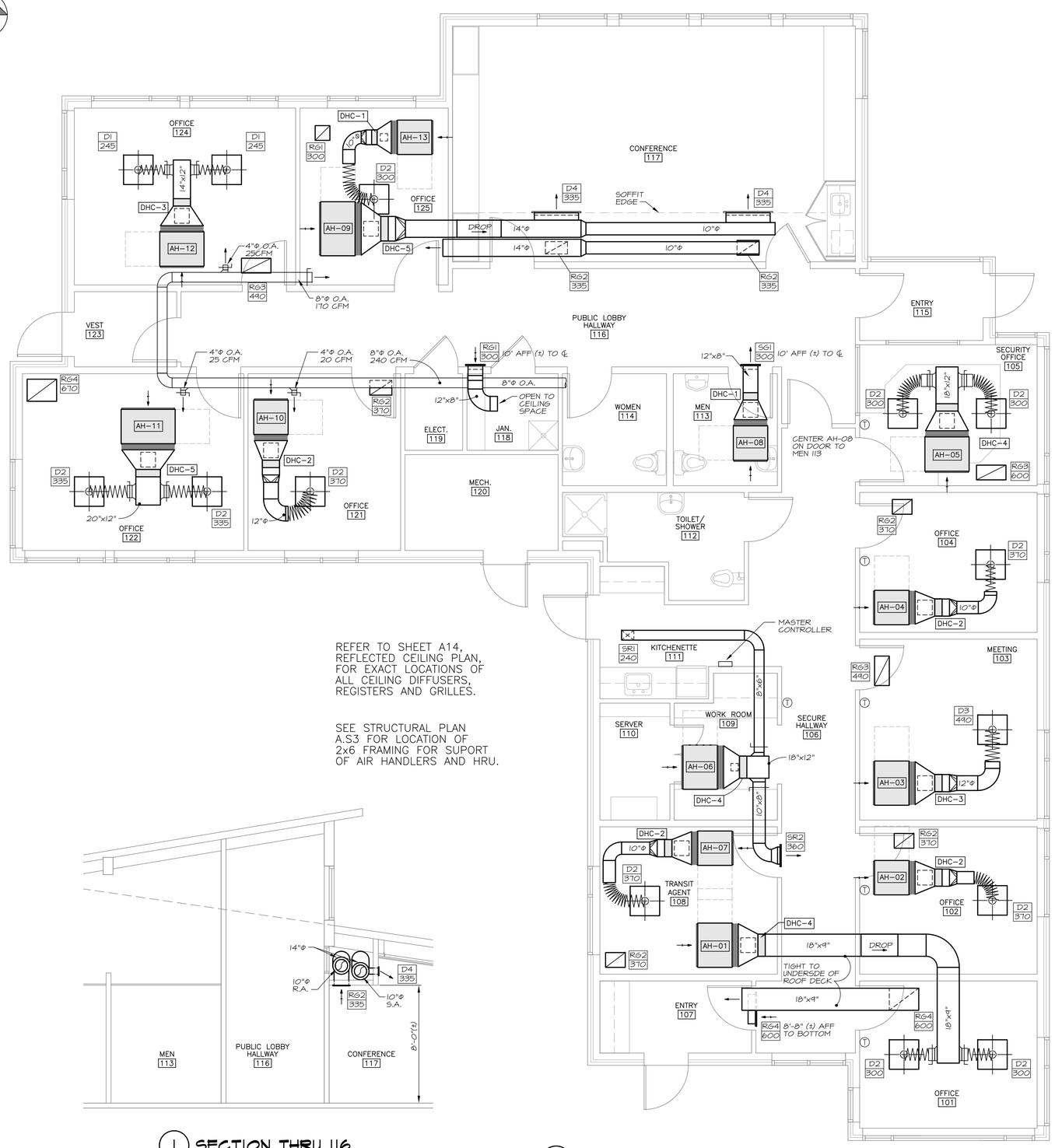

REFER TO SHEET A14, REFLECTED CEILING PLAN, FOR EXACT LOCATIONS OF ALL CEILING DIFFUSERS, REGISTERS AND GRILLES.

SEE STRUCTURAL PLAN A.S3 FOR LOCATION OF 2x6 FRAMING FOR SUPORT OF AIR HANDLERS AND HRU.

1 SECTION THRU 116
SCALE: ¼" = 1'-0"

2 MAIN FLOOR MECHANICAL PLAN
SCALE: ¼" = 1'-0"

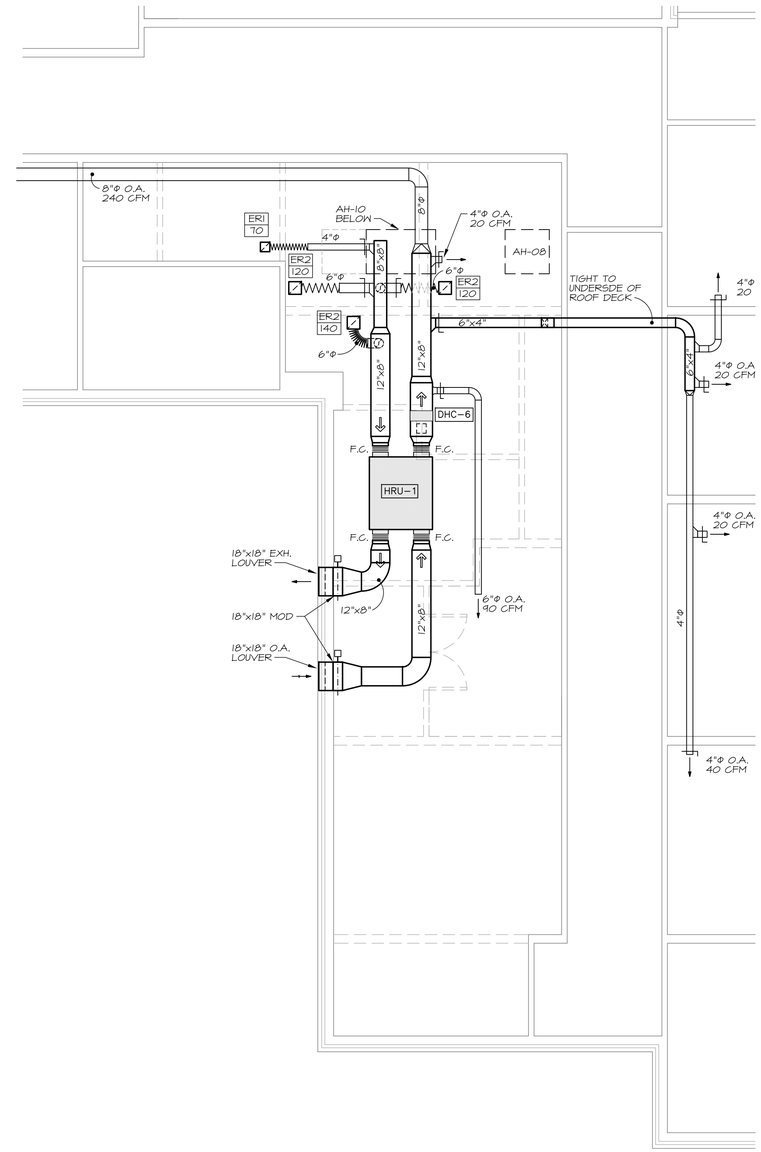

3 VENTILATION PLAN
SCALE: ¼" = 1'-0"

¼" = 1'-0" 0' 1' 2' 3' 4' 8' 12' 16'

STATE OF MAINE
DEPARTMENT OF TRANSPORTATION

PROJECT NUMBER 017820.00

PIN 017820.00

STATE OF MAINE · Kurt F. Magnusson 10257 · PROFESSIONAL ENGINEER

SIGNATURE		P.E. NUMBER	
DATE	MARCH 25, 2011		

PROJ. MANAGER	CRAIG R. MORIN	BY	DATE
DESIGN-DETAILED	REM	REM	3/25/11
CHECKED-REVIEWED	KFM	KFM	3/25/11
DESIGN2-DETAILED2	-	-	-
DESIGN3-DETAILED3	-	-	-
REVISIONS 1			-
REVISIONS 2			-
REVISIONS 3			-
REVISIONS 4			-
FIELD CHANGES			-

PORTLAND INTERNATIONAL MARINE TERMINAL IMPROVEMENTS
PORTLAND CUMBERLAND COUNTY

MECHANICAL DUCTWORK PLAN

SHEET NUMBER
A.M1

June 07, 2011 – 1:00 pm
\\Msefps1\projects\1032 Portland IMT Office\Drawings\1032-M1.dwg

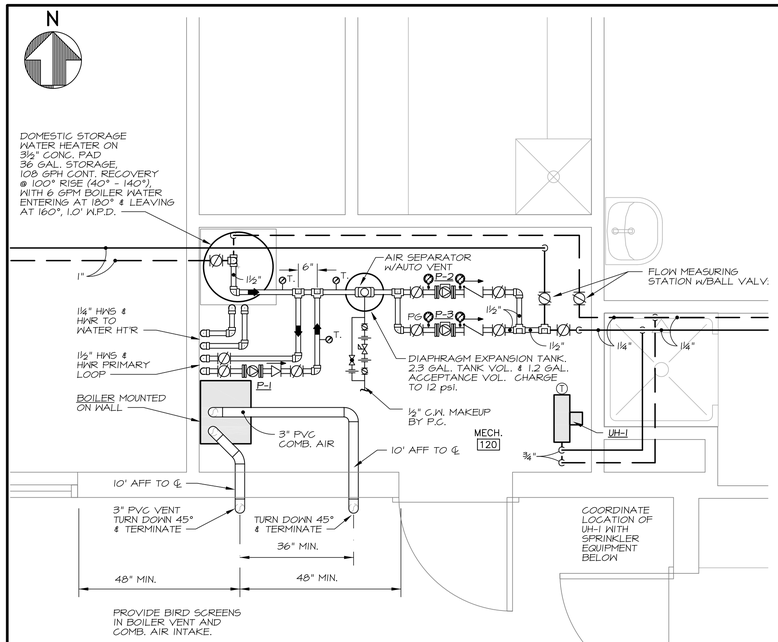

1 MECHANICAL ROOM PLAN

SCALE: ½" = 1'-0"

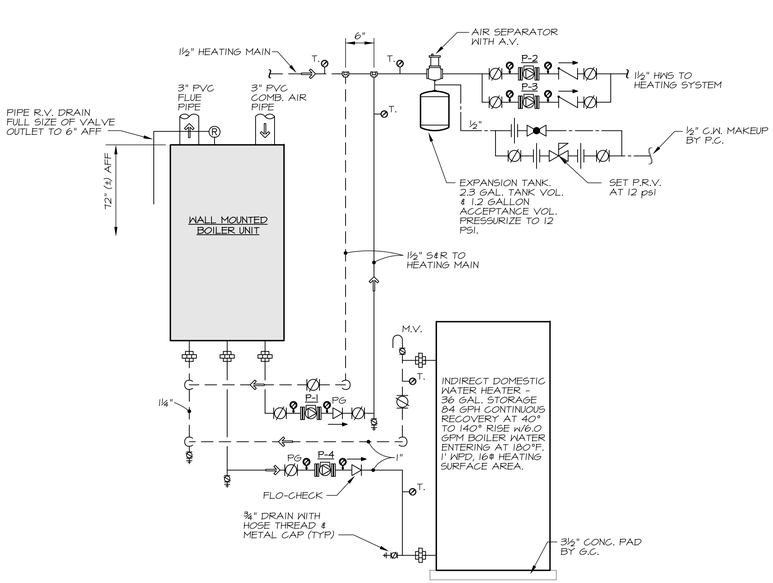

2 BOILER PIPING DIAGRAM

NO SCALE

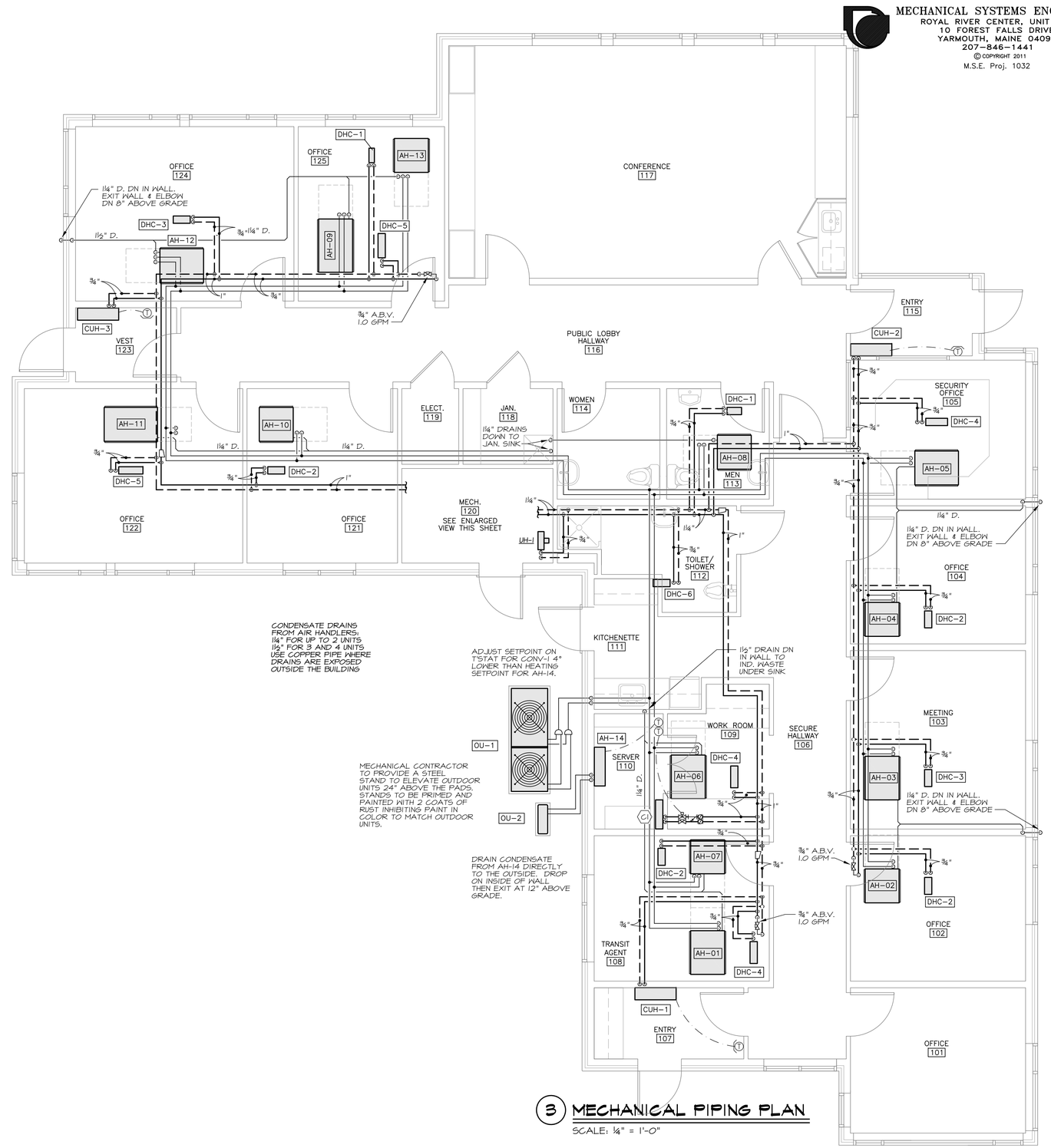

3 MECHANICAL PIPING PLAN

SCALE: ¼" = 1'-0"

½" = 1'-0" (0, 6", 12", 24", 48", 72", 96")

¼" = 1'-0" (0', 1', 2', 3', 4', 8', 12', 16')

MECHANICAL SYSTEMS ENGINEERS
ROYAL RIVER CENTER, UNIT #10
10 FOREST FALLS DRIVE
YARMOUTH, MAINE 04096
207-846-1441

© COPYRIGHT 2011
M.S.E. Proj. 1032

STATE OF MAINE
DEPARTMENT OF TRANSPORTATION

PROJECT NUMBER 017820.00

PIN 017820.00

STATE OF MAINE · Kurt F. Magnusson 10257 · PROFESSIONAL ENGINEER

PROJ. MANAGER	CRAIG R. MORIN	BY	DATE
DESIGN-DETAILED	REM	REM	3/25/11
CHECKED-REVIEWED	KFM	KFM	3/25/11
DESIGN2-DETAILED2	-	-	-
DESIGN3-DETAILED3	-	-	-
REVISIONS 1			-
REVISIONS 2			-
REVISIONS 3			-
REVISIONS 4			-
FIELD CHANGES			-

SIGNATURE

P.E. NUMBER

DATE MARCH 25, 2011

PORTLAND INTERNATIONAL MARINE TERMINAL IMPROVEMENTS
PORTLAND CUMBERLAND COUNTY

MECHANICAL PIPING PLAN

SHEET NUMBER

A.M2

June 07, 2011 – 1:00 pm
\\Msefps1\projects\1032 Portland IMT Office\Drawings\1032-M2.dwg

MECHANICAL SYSTEMS ENGINEERS
ROYAL RIVER CENTER, UNIT #10
10 FOREST FALLS DRIVE
YARMOUTH, MAINE 04096
207-846-1441
© COPYRIGHT 2011
M.S.E. Proj. 1032

DIAGRAM SYMBOL LEGEND	
DISPLAY	DESCRIPTION
——///——	POWER WIRE
————	CONTROL WIRE
- - - - - -	REF. PIPE

PIPING LIST		
SYMBOL	BRANCH PIPE MODEL NAME	
J1	CMY-Y100VBK2	
J2	CMY-Y202-G2	
J3	CMY-Y102S-G2	
J4	CMY-Y102L-G2	
SYMBOL	LIQUID PIPE	GAS PIPE SIZE
P1		7/8
P2	3/8	
P3		3/4
P4	5/8	1 1/8
P5	3/8	5/8
P6	1/2	1 1/8
P7	1/4	1/2
P8	3/8	3/4

Additional refrigerant charge may needed depending on the size and length of extended piping. Please refer the amount of pre-charge and the formula of calculation which is mentioned in the manufacturer's data.

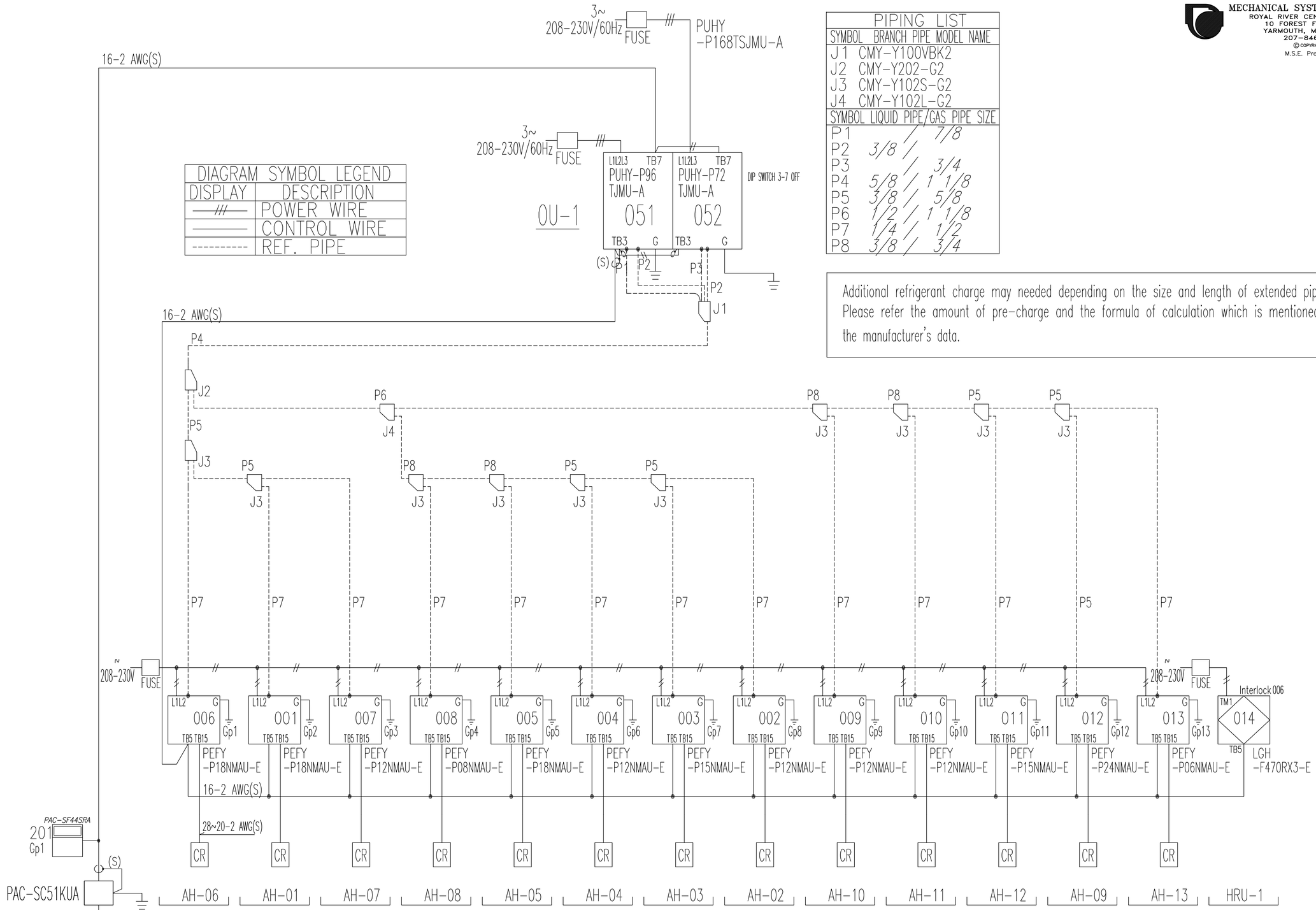

REMARKS
$1.25mm^2$(16 AWG) : $1.25mm^2$(16 AWG) or more.
$0.75mm^2$(20 AWG) : between $0.5mm^2$(24 AWG) and $0.75mm^2$(20 AWG).

STATE OF MAINE
DEPARTMENT OF TRANSPORTATION

PROJECT NUMBER 017820.00

PIN 017820.00

STATE OF MAINE PROFESSIONAL ENGINEER Kurt F. Magnusson 10257

		BY	DATE
PROJ. MANAGER	CRAIG R. MORIN		
DESIGN-DETAILED	REM	REM	3/25/11
CHECKED-REVIEWED	KFM	KFM	3/25/11
DESIGN2-DETAILED2	-	-	-
DESIGN3-DETAILED3	-	-	-
REVISIONS 1			
REVISIONS 2			
REVISIONS 3			
REVISIONS 4			
FIELD CHANGES			-

SIGNATURE

P.E. NUMBER

DATE MARCH 25, 2011

PORTLAND INTERNATIONAL
MARINE TERMINAL IMPROVEMENTS
PORTLAND CUMBERLAND COUNTY

HEAT PUMP SYSTEM SCHEMATIC

SHEET NUMBER
A.M3

June 07, 2011 – 12:59 pm
\\Maefps1\projects\1032 Portland IMT Office\Drawings\1032-M3.dwg

MECHANICAL SYSTEMS ENGINEERS
ROYAL RIVER CENTER, UNIT #10
10 FOREST FALLS DRIVE
YARMOUTH, MAINE 04096
207-846-1441
© COPYRIGHT 2011
M.S.E. Proj. 1032

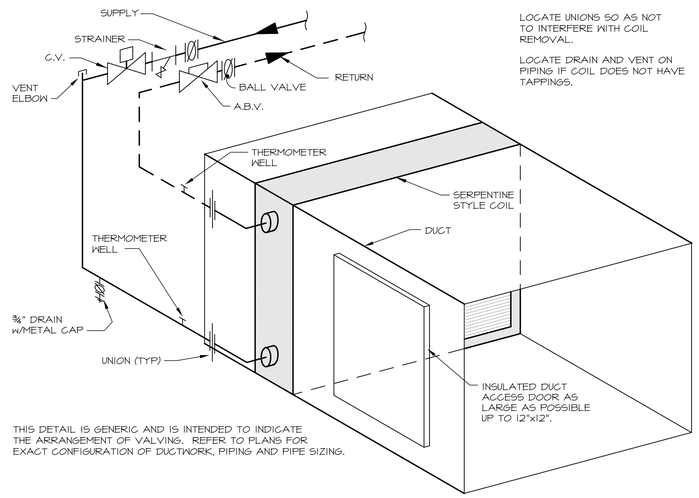

1 DUCT HOT WATER COIL DETAIL
NO SCALE

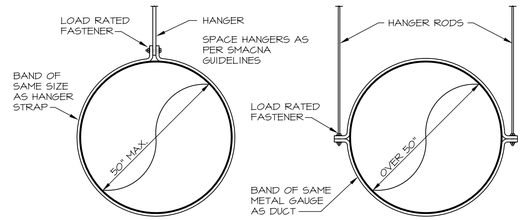

4 ROUND DUCT SUPPORTS
NO SCALE

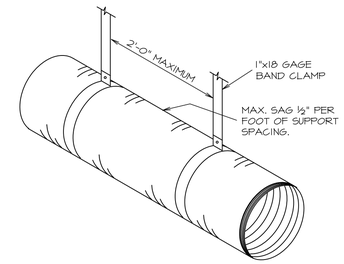

7 FLEXIBLE DUCT SUPPORT DETAIL
NO SCALE

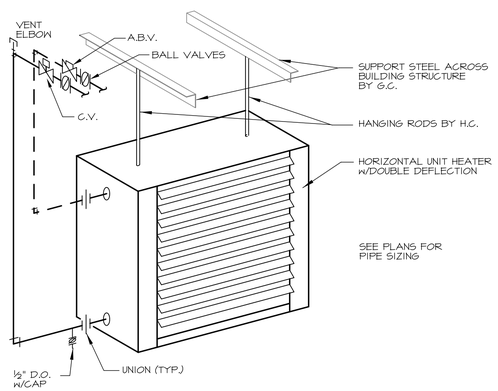

2 DOWNFEED HORIZONTAL UNIT HEATER
NO SCALE

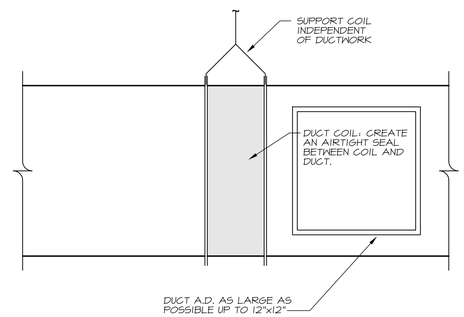

5 DUCT REHEAT COIL
NO SCALE

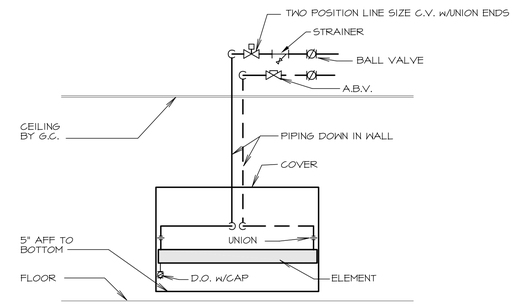

8 DOWNFEED CONVECTOR
NO SCALE

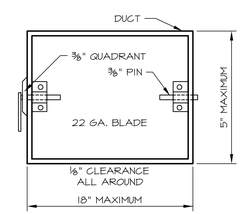

9 SHOP FABRICATED MANUAL DAMPER
NO SCALE

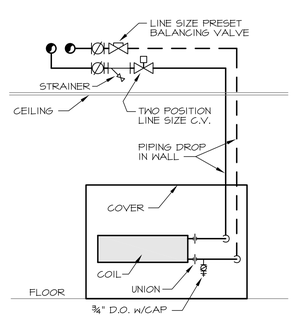

3 DOWNFEED CABINET UNIT HEATER
NO SCALE

NOTE:
LIQUID LINES SIMILAR WITH FELT LINED BRASS SLEEVE ALL AROUND PIPE.

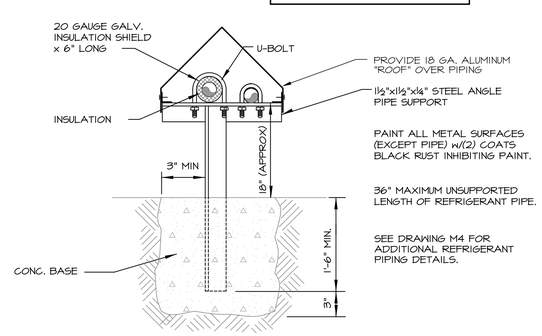

6 EXTERIOR REFRIGERANT PIPE SUPPORT
NO SCALE

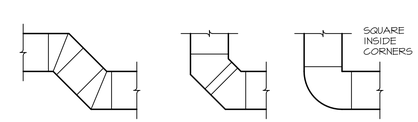

USE SMOOTH RADIUS ELBOWS ONLY

THESE TYPES OF FITTINGS ARE UNACCEPTABLE UNLESS SPECIFICALLY INDICATED OTHERWISE.

10 UNACCEPTABLE DUCT FITTINGS
NO SCALE

STATE OF MAINE
DEPARTMENT OF TRANSPORTATION

PROJECT NUMBER 017820.00

PIN 017820.00

STATE OF MAINE · Kurt F. Magnusson 10257 · PROFESSIONAL ENGINEER

PROJ. MANAGER	CRAIG R. MORIN	BY	DATE
DESIGN-DETAILED	REM	REM	3/25/11
CHECKED-REVIEWED	KFM	KFM	3/25/11
DESIGN2-DETAILED2	-	-	-
DESIGN3-DETAILED3	-	-	-
REVISIONS 1			
REVISIONS 2			
REVISIONS 3			
REVISIONS 4			
FIELD CHANGES		-	-

SIGNATURE

P.E. NUMBER

DATE MARCH 25, 2011

PORTLAND INTERNATIONAL MARINE TERMINAL IMPROVEMENTS
PORTLAND CUMBERLAND COUNTY

GENERAL MECHANICAL DETAILS

SHEET NUMBER
A.M4

June 07, 2011 – 12:59 pm
\\Meefps1\projects\1032 Portland IMT Office\Drawings\1032 M4-M5.dwg

MECHANICAL SYSTEMS ENGINEERS
ROYAL RIVER CENTER, UNIT #10
10 FOREST FALLS DRIVE
YARMOUTH, MAINE 04096
207-846-1441
© COPYRIGHT 2011
M.S.E. Proj. 1032

OUTDOOR UNIT SCHEDULE

TAG	AREA SERVED	NOM. TONS	COOLING * BTU	COOLING * KW	HEATING ** BTU	HEATING ** KW	CONDENSER FAN QUAN.	CONDENSER FAN CFM	CONDENSER FAN KW	COMPRESSORS QUAN.	COMPRESSORS KW	CRANKCASE HT'R QUAN.	CRANKCASE HT'R WATTS	ELECTRIC (TOTAL LOAD) POWER	ELECTRIC (TOTAL LOAD) MCA	REFRIGERANT TYPE	REFRIGERANT LIQUID	REFRIGERANT SUCTION	WEIGHT LBS	REMARKS
OU-1	HEAT PUMP SYSTEM	14.0	168,000	13.62	188,000	14.65	2	6,180	0.92 EA.	2	11.9 TTL	2	80 TTL	208V-60-3P	61	R410A	⅝"	1⅛"	938	MOUNT 24" ABOVE GRADE
OU-2	110 SERVER	0.75	9,000	0.58	10,900	0.71	1	N/A	0.129	1	N/A	N/A	N/A	208V-60-1P	12	R410A	¼"	⅜"	80	MOUNT 24" ABOVE GRADE

* OUTDOOR AMBIENT OF 95 DEG. F. & INDOOR CONDITION OF 80/67 DEG. F. ** OUTDOOR AMBIENT OF 47/43 DEG. F. & INDOOR CONDITION OF 70 DEG. F.

AIR HANDLER SCHEDULE

TAG	AREA SERVED	DHC NO.	NOM. TONS	CFM	CFM O.A.	EXT. S.P.	FAN KW	ELECTRIC POWER	ELECTRIC MCA	COOLING * BTU	COOLING * KW	HEATING ** BTU	HEATING ** KW	REFRIGERANT TYPE	REFRIGERANT LIQUID	REFRIGERANT GAS	WEIGHT LBS	REMARKS
AH-01	101 OFFICE	DHC-4	1.50	600	17	0.60"	0.085	208V-60-1P	1.56	18,000	0.110	20,000	0.090	R410A	3/8	5/8	58	DUCTED, 10" HIGH
AH-02	102 OFFICE	DHC-2	1.00	370	17	0.60"	0.085	208V-60-1P	1.21	12,000	0.090	13,500	0.070	R410A	1/4	1/2	51	DUCTED, 10" HIGH
AH-03	103 MEETING	DHC-3	1.25	490	38	0.60"	0.085	208V-60-1P	1.45	15,000	0.090	17,000	0.070	R410A	1/4	1/2	58	DUCTED, 10" HIGH
AH-04	104 OFFICE	DHC-2	1.00	370	17	0.60"	0.085	208V-60-1P	1.21	12,000	0.090	13,500	0.070	R410A	1/4	1/2	51	DUCTED, 10" HIGH
AH-05	105 SECURITY OFFICE	DHC-4	1.50	600	17	0.60"	0.085	208V-60-1P	1.56	18,000	0.110	20,000	0.090	R410A	1/4	1/2	58	DUCTED, 10" HIGH
AH-06	106, 109 & 111	DHC-4	1.50	600	27	0.60"	0.085	208V-60-1P	1.56	18,000	0.110	20,000	0.090	R410A	1/4	1/2	58	DUCTED, 10" HIGH
AH-07	108 TRANSIT AGENT	DHC-2	1.00	370	17	0.60"	0.085	208V-60-1P	1.21	12,000	0.090	13,500	0.070	R410A	1/4	1/2	51	DUCTED, 10" HIGH
AH-08	116 PUBLIC HALLWAY	DHC-1	0.67	300	18	0.60"	0.085	208V-60-1P	1.05	8,000	0.060	9,000	0.040	R410A	1/4	1/2	51	DUCTED, 10" HIGH
AH-09	117 CONFERENCE	DHC-5	2.00	670	156	0.60"	0.070	208V-60-1P	2.25	24,000	0.040	27,000	0.050	R410A	3/8	5/8	51	DUCTED, 10" HIGH
AH-10	121 OFFICE	DHC-2	1.00	370	17	0.60"	0.085	208V-60-1P	1.21	12,000	0.090	13,500	0.070	R410A	1/4	1/2	51	DUCTED, 10" HIGH
AH-11	122 OFFICE	DHC-5	2.00	670	26	0.60"	0.070	208V-60-1P	2.25	24,000	0.040	27,000	0.050	R410A	3/8	5/8	51	DUCTED, 10" HIGH
AH-12	124 OFFICE	DHC-3	1.25	490	26	0.60"	0.085	208V-60-1P	1.45	15,000	0.090	17,000	0.070	R410A	1/4	1/2	58	DUCTED, 10" HIGH
AH-13	125 OFFICE	DHC-1	0.50	300	17	0.60"	0.085	208V-60-1P	1.05	6,000	0.060	6,700	0.040	R410A	1/4	1/2	51	DUCTED, 10" HIGH
AH-14	110 SERVER	NONE	0.75	380	0	0.00"	0.170	208V-60-1P	1.00	9,000	0.580	10,900	0.710	R410A	1/4	3/8	27	WALL MOUNTED

* COOLING CAPACITIES BASED ON 80/67 DEG. F. ENTERING AIR & 95 DEG. F. AT THE CONDENSER (OUTDOOR UNIT)
** HEATING CAPACITIES BASED ON 70 DEG. F. INDOOR AND 47 DB & 43 WB DEG. F. AT THE CONDENSER (OUTDOOR UNIT)

STATIC PRESSURES INDICATED ARE THE MAXIMUMS THE EQUIPMENT CAN DELIVER

AIR TERMINAL SCHEDULE

TAG	SIZE	MAX CFM	MAX NC	MAX SP	REMARKS
D1	8"	245	20	0.065"	SQUARE DIFFUSER / LAY-IN FRAME
D2	10"	370	20	0.065"	SQUARE DIFFUSER / LAY-IN FRAME
D3	12"	510	20	0.065"	SQUARE DIFFUSER / LAY-IN FRAME
D4	(2) 1.1/2" SLOTS	370	21	0.032"	36" SLOT DIFFUSER FOR ROUND DUCT
ER1	6" x 6"	80	20	0.070"	EXHAUST REGISTER
ER2	8" x 8"	150	20	0.045"	EXHAUST REGISTER
RG1	12"x12"	300	20	0.040"	FILTERED RETURN GRILLE
RG2	20"x12"	400	20	0.040"	FILTERED RETURN GRILLE
RG3	24"x12"	600	20	0.040"	FILTERED RETURN GRILLE / LAY IN FRAME
RG4	24"x18"	800	20	0.040"	FILTERED RETURN GRILLE / LAY IN FRAME
SG1	12"x8"	320	20	0.030"	DOUBLE DEFLECTION SUPPLY REGISTER
SR1	10"x8"	240	20	0.030"	DOUBLE DEFLECTION SUPPLY REGISTER
SR2	14"x8"	400	20	0.030"	DOUBLE DEFLECTION SUPPLY REGISTER

UNIT HEATER SCHEDULE

TAG	TYPE	AREA SERVED	E.W.T.	E.A.T.	MBH	GPM	W.P.D.	CFM	MOTOR HP	FAN RPM	ELECTRIC	REMARKS
CUH-1	VERT. CABINET	107 ENTRY	130	40	8.81	0.50	1.44'	140	1/30	626	120V-60-1P	FLOOR MT'D, INVERTED AIR FLOW
CUH-2	VERT. CABINET	115 ENTRY	130	40	8.81	0.50	1.44'	140	1/30	626	120V-60-1P	FLOOR MT'D, INVERTED AIR FLOW
CUH-3	VERT. CABINET	123 VESTIBULE	130	40	8.81	0.50	1.44'	140	1/30	626	120V-60-1P	FLOOR MT'D, INVERTED AIR FLOW
UH-1	HORIZONTAL	120 MECHANICAL	130	60	3.88	0.80	0.80'	210	1/30	1,350	120V-60-1P	HORIZONTAL AIR FLOW

PUMP SCHEDULE

TAG	TYPE	AREA SERVED	GPM	HEAD	HP	RPM	AMPS	ELECTRIC	REMARKS
P-1	IN-LINE	HEATING SYSTEM PRIMARY LOOP	17	6'	1/8	3,200	1.4	115V-60-1P	CONSTANT SPEED
P-2	IN-LINE	HEATING SYSTEM SECONDARY	17	15'	1/8	1,400 --> 3,700	0.13 --> 1.20	230V-60-1P	VARIABLE SPEED
P-3	IN-LINE	HEATING SYSTEM SECONDARY	17	15'	1/8	1,400 --> 3,700	0.13 --> 1.20	230V-60-1P	STAND-BY FOR P-2
P-4	IN-LINE	DOMESTIC HOT WATER	6	8'	1/8	3,200	1.4	115V-60-1P	CONSTANT SPEED

P-2 & P-3 ARE CAPABLE OF OPERATING AT 208 VOLTS

DUCT HEATING COIL SCHEDULE

TAG	TYPE	SIZE	ROWS	CFM	APD	EAT	LAT	EWT	MBH	GPM	WPD	REMARKS
DHC-1	HOT WATER SERPENTINE	12" x 9"	2	300	0.11"	60	85.2	140	8.20	0.50	0.52'	SLIP-IN DUCT MOUNTING
DHC-2	HOT WATER SERPENTINE	14" x 9"	2	370	0.11"	60	88.7	140	11.54	0.60	0.62'	SLIP-IN DUCT MOUNTING
DHC-3	HOT WATER SERPENTINE	14" x 12"	2	490	0.11"	60	88.2	140	14.98	0.70	0.83'	SLIP-IN DUCT MOUNTING
DHC-4	HOT WATER SERPENTINE	18" x 12"	2	600	0.08"	60	85.2	140	16.38	1.00	0.50'	SLIP-IN DUCT MOUNTING
DHC-5	HOT WATER SERPENTINE	20" x 12"	2	670	0.10"	60	88.0	140	20.33	1.00	0.54'	SLIP-IN DUCT MOUNTING
DHC-6	HOT WATER SERPENTINE	14" x 12"	2	450	0.08"	45	73.3	140	13.81	0.70	0.24'	SLIP-IN DUCT MOUNTING

HEAT RECOVERY UNIT SCHEDULE

TAG	AREA SERVED	WINTER EXH. CFM	WINTER EXH. TEMP.	WINTER O.A. CFM	WINTER O.A. TEMP.	SUPPLY AIR TO SPACES CFM	SUPPLY AIR TO SPACES TEMP.	SUPPLY AIR TO SPACES D.B. RECOVERY	EXTERNAL S.P.	ELECTRIC	WEIGHT	REMARKS
HRU-1	ENTIRE BUILDING	450	68	450	-10	450	47.7	74%	0.70"	208V-60-1P	143	SUSPENDED

BOILER SCHEDULE

TAG	GROSS MBH	NET MBH	FUEL	PRESSURE	WATER	AMPS	ELECTRIC	REMARKS
B-1	170.0	134.0	NAT. GAS	40 psig	4.6 GAL.	5	120V-60-1P	CONDENSING GAS BOILER

CONVECTOR SCHEDULE

TAG	TYPE	MBH	EWT	GPM	LENGTH	HEIGHT	DEPTH	REMARKS
C-1	WALL MOUNTED, FLAT TOP	1.42	140	0.50	24"	18"	6"	FRONT OUTLET, BOTTOM INLET

SYMBOLS AND ABBREVIATIONS

ABV	AUTOMATIC BALANCING VALVE
AC	AIR CONDITIONING
AD	ACCESS DOOR
AFF	ABOVE FINISH FLOOR
AH	AIR HANDLER
APD	AIR PRESSURE DROP
ATC	AUTOMATIC TEMP. CONTROL
AV	AUTOMATIC VENT
B	BOILER
BD	BACKDRAFT DAMPER
C	CONVECTOR
CD	CONDENSATE DRAIN
CFH	CUBIC FEET PER HOUR
CFM	CUBIC FEET PER MINUTE
CUH	CABINET UNIT HEATER
CV	CONTROL VALVE
D	DRAIN
DIFF	DIFFUSER
DO	DRAW-OFF
EAT	ENTERING AIR TEMPERATURE
EC	ELECTRICAL CONTRACTOR
EDB	ENTERING DRY BULB
EG	EXHAUST GRILLE
ER	EXHAUST REGISTER
ESP	EXTERNAL STATIC PRESSURE
EWB	ENTERING WET BULB
EWT	ENTERING WATER TEMPERATURE
FC	FLEXIBLE CONNECTOR
FCV	FLOW CONTROL VALVE
FS	FLOW SENSOR
FV	FACE VELOCITY
GC	GENERAL CONTRACTOR
GPH	GALLONS PER HOUR
GPM	GALLONS PER MINUTE
GV	GATE VALVE
HC	HEATING CONTRACTOR
HRU	HEAT RECOVERY UNIT
HWR	HOT WATER RETURN
HWS	HOT WATER SUPPLY
H&V	HEATING & VENTILATING
HVAC	HEATING, VENTILATING AND AIR CONDITIONING
IER	INVERTED ECCENTRIC REDUCER
L	LOUVER
LAT	LEAVING AIR TEMPERATURE
LDB	LEAVING DRY BULB
LWB	LEAVING WET BULB
LWCO	LOW WATER CUT-OFF
MBH	THOUSAND BTU PER HOUR
MBV	MANUAL BALANCING VALVE
MD	MANUAL DAMPER
MOD	MOTOR OPERATED DAMPER
MF	MONOFLOW FITTING
MPS	MEDIUM PRESSURE STEAM
MV	MANUAL VENT
NG	NATURAL GAS
NTS	NOT TO SCALE
OA	OUTDOOR AIR
OD	OUTSIDE DIMENSION
OU	OUTDOOR UNIT
P	PUMP
PC	PLUMBING CONTRACTOR
PG	PRESSURE GAUGE
PRV	PRESSURE REDUCING VALVE
R	RETURN
RA	RETURN AIR
RG	RETURN GRILLE
RIS	RUBBER-IN-SHEAR
RL	REFRIGERANT LIQUID
RS	REFRIGERANT SUCTION
RR	RETURN REGISTER
RV	RELIEF VALVE
S	SUPPLY
SA	SUPPLY AIR
SC	SITE CONTRACTOR
SG	SUPPLY GRILLE
SP	STATIC PRESSURE
SR	SUPPLY REGISTER
SV	SAFETY VALVE
T	THERMOMETER
TC	TEMPERATURE CONTROL
TSP	TOTAL STATIC PRESSURE
T'STAT	THERMOSTAT
TV	TURNING VANE
UC	UNDERCUT
UG	UNDERGROUND
UH	UNIT HEATER
V	VENT
VI	VIBRATION ISOLATOR
WPD	WATER PRESSURE DROP
WTD	WATER TEMPERATURE DROP

WATER SUPPLY PIPING
WATER RETURN PIPING
COLD WATER PIPING
L — REFRIGERANT LIQUID PIPING
S — REFRIGERANT SUCTION PIPING
UNION
FLANGE
GATE VALVE
GLOBE VALVE
CHECK VALVE
BALANCING VALVE
FUSIBLE SAFETY VALVE
CONTROL VALVE (TWO WAY)
CONTROL VALVE (THREE WAY)
PRESSURE REDUCING VALVE
FLOW CONTROL VALVE
BALL VALVE
STRAINER
INVERTED ECCENTRIC REDUCER
THERMOSTAT
THERMOSTAT WITH GUARD
MANUAL DAMPER
FLEXIBLE DUCT
LAY-IN DIFFUSER
SURFACE MOUNT DIFFUSER
SUPPLY AIR DUCT
RETURN / RELIEF AIR DUCT

STATE OF MAINE
DEPARTMENT OF TRANSPORTATION

PROJECT NUMBER 017820.00

PIN 017820.00

STATE OF MAINE · Kurt F. Magnusson 10257 · PROFESSIONAL ENGINEER

		BY	DATE
PROJ. MANAGER	CRAIG R. MORIN		
DESIGN-DETAILED	REM	REM	3/25/11
CHECKED-REVIEWED	KFM	KFM	3/25/11
DESIGN2-DETAILED2	-	-	-
DESIGN3-DETAILED3	-	-	-
REVISIONS 1			
REVISIONS 2			
REVISIONS 3			
REVISIONS 4			
FIELD CHANGES			-

SIGNATURE
P.E. NUMBER
DATE MARCH 25, 2011

PORTLAND INTERNATIONAL
MARINE TERMINAL IMPROVEMENTS
PORTLAND CUMBERLAND COUNTY

MECHANICAL
EQUIPMENT SCHEDULES

SHEET NUMBER
A.M5

June 07, 2011 – 12:58 pm
\\Wsefps1\projects\1032 Portland IMT Office\Drawings\1032 M4-M5.dwg

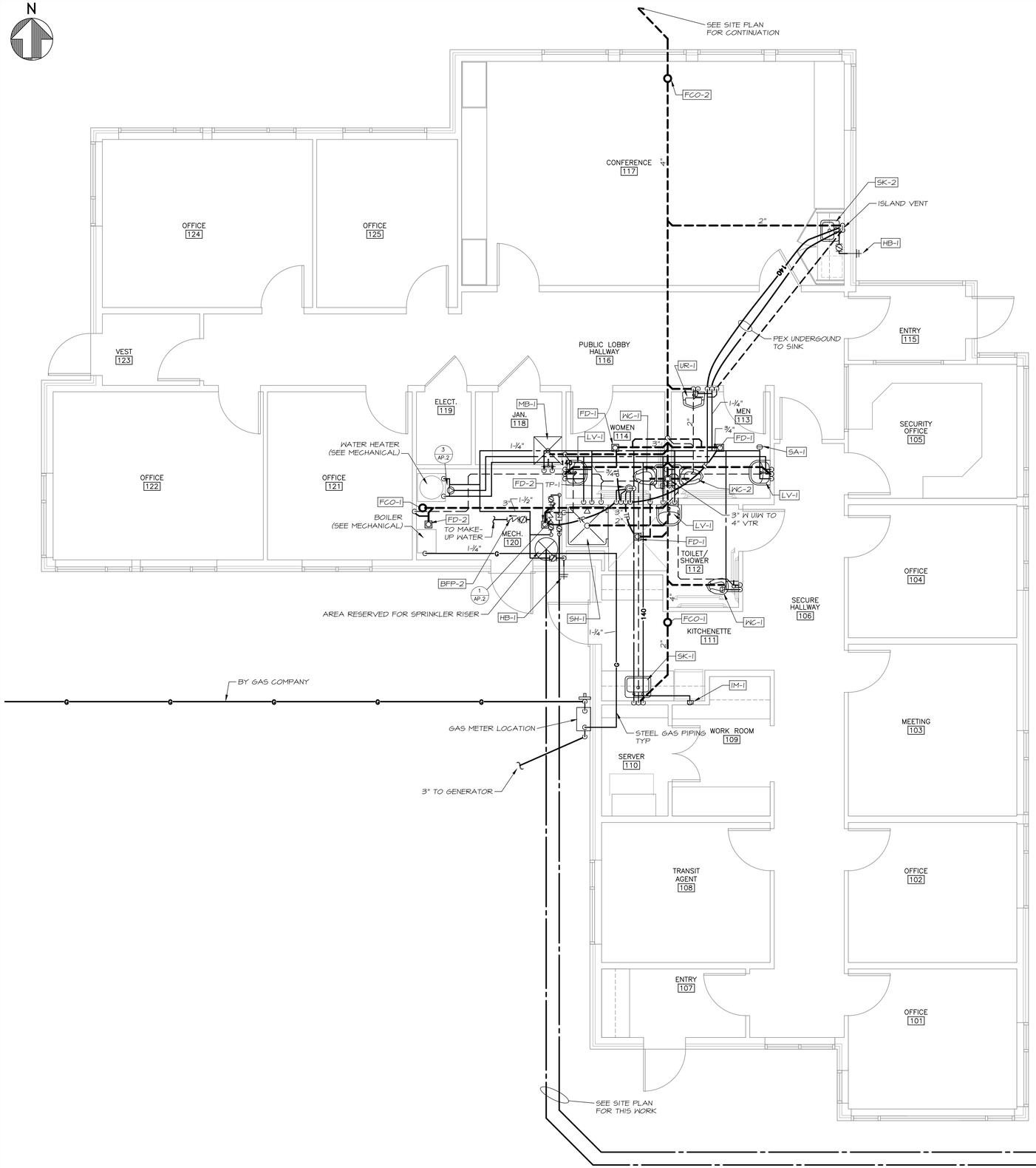

MECHANICAL SYSTEMS ENGINEERS
ROYAL RIVER CENTER, UNIT #10
10 FOREST FALLS DRIVE
YARMOUTH, MAINE 04096
207-846-1441

© COPYRIGHT 2011
M.S.E. Proj. 1032

ABBREVIATIONS, LINE TYPES & SYMBOLS

140	140 DEG F HOT WATER
@	AT
A	AMPS
ADA	AMERICANS WITH DISABILITIES ACT
AFF	ABOVE FINISHED FLOOR
BFP	BACKFLOW PREVENTER
BLV	BALL VALVE
CNTR	COUNTER
CO	CLEANOUT
CONT	CONTINUATION
COORD	COORDINATION
CW	COLD WATER, CLOTHES WASHER
C&HW	COLD & HOT WATER
DAW	DROP AT WALL
DEG	DEGREES
DIV	DIVISION
DIW	DROP IN WALL
DN	DOWN
DNAW	DOWN AT WALL
DNIC	DOWN IN CHASE
DNIW	DOWN IN WALL
DO	DRAINOFF
DW	DISHWASHER
ET	EXPANSION TANK
FCO	FLOOR CLEANOUT
FD	FLOOR DRAIN
FFE	FINISHED FLOOR ELEVATION
G	GAS (NATURAL)
GAL	GALLONS
GC	GENERAL CONTRACTOR
GHT	GARDEN HOSE THREAD
GPF	GALLONS PER FLUSH
GPM	GALLONS PER MINUTE
GV	GATE VALVE
HB	HOSE BIB
HC	HEATING CONTRACTOR
HW	HOT WATER
HWR	HOT WATER RETURN
IE	INVERT ELEVATION
IDW	INDIRECT WASTE
IM	ICE MAKER
LV	LAVATORY
M	METER
MB	MOP BASIN
MTD	MOUNTED
MV	MIXING VALVE
NB	NICKEL BRONZE
OD	OUTSIDE DIAMETER
PC	PLUMBING CONTRACTOR
PDI	PLUMBING & DRAINAGE INSTITUTE
PG	PRESSURE GAUGE
PH	PHASE
PRV	PRESSURE REDUCING VALVE
PSI	POUNDS PER SQUARE INCH
RAW	RISE AT WALL
RH	RIGHT HAND
RIC	RISE IN CHASE
RIW	RISE IN WALL
RUC	RUN UNDER COUNTER
RUF	RUN UNDER FLOOR
RV	RELIEF VALVE
S	SANITARY WASTE
SA	SHOCK ABSORBER
SH	SHOWER
SK	SINK
SS	STAINLESS STEEL
T	THERMOMETER
TP	TRAP PRIMER
TYP	TYPICAL
UIC	UP IN CHASE
U&DNIC	UP & DOWN IN CHASE
U&DNIW	UP & DOWN IN WALL
UIW	UP IN WALL
V	VENT
VB	VACUUM BREAKER
VC	VITREOUS CHINA
VIF	VERIFY IN FIELD
VRV	VACUUM RELIEF VALVE
VTR	VENT THRU ROOF
W	WASTE
W/	WITH
WC	WATER CLOSET, WATER COLUMN
WCO	WALL CLEANOUT
WSI	WARM SIDE OF INSULATION

SANITARY/ WASTE PIPING BELOW SLAB
SANITARY / WASTE PIPING ABOVE SLAB
IDW — INDIRECT WASTE PIPING ABOVE SLAB
VENT PIPING ABOVE SLAB
VENT PIPING BELOW SLAB
COLD WATER PIPING
COLD WATER PIPING BELOW SLAB
TP — TRAP PRIMER PIPING
120 HOT WATER PIPING
HOT WATER RETURN PIPING
140 — 140 HOT WATER PIPING
G — GAS PIPING
BALL VALVE
VERTICAL BALL VALVE
BALANCING VALVE
CHECK VALVE
BACKFLOW PREVENTER
VACUUM RELIEF VALVE
RELIEF VALVE
PRESSURE REDUCING VALVE
THERMOMETER
PRESSURE GAUGE
TRAP PRIMER
DROP/RISE IN LINE
LINE UP TO FLOOR ABOVE
TEE -DROP
SHOCK ABSORBER
UNION
MIXING VALVE
FLOOR CLEANOUT
FLOOR DRAIN
WALL CLEANOUT
VENT THROUGH ROOF
HOSE BIB
M — WATER METER
XX-1 — PLUMBING FIXTURE/ EQUIPMENT NUMBER TAG

STATE OF MAINE
DEPARTMENT OF TRANSPORTATION

PROJECT NUMBER 017820.00

PIN 017820.00

STATE OF MAINE · Kurt F. Magnusson 10257 · PROFESSIONAL ENGINEER

PROJ. MANAGER	CRAIG R. MORIN	BY	DATE
DESIGN-DETAILED	EJP	EJP	3/25/11
CHECKED-REVIEWED	KFM	KFM	3/25/11
DESIGN2-DETAILED2	-	-	-
DESIGN3-DETAILED3	-	-	-
REVISIONS 1	-	-	-
REVISIONS 2	-	-	-
REVISIONS 3	-	-	-
REVISIONS 4	-	-	-
FIELD CHANGES	-	-	-

SIGNATURE
P.E. NUMBER
DATE MARCH 25, 2011

PORTLAND INTERNATIONAL MARINE TERMINAL IMPROVEMENTS
PORTLAND CUMBERLAND COUNTY

PLUMBING FLOOR PLAN

SHEET NUMBER
A.P1

June 07, 2011 – 1:02 pm
\\Msefps1\projects\1032 Portland IMT Office\Drawings\1032-P1.dwg

MECHANICAL SYSTEMS ENGINEERS
ROYAL RIVER CENTER, UNIT #10
10 FOREST FALLS DRIVE
YARMOUTH, MAINE 04096
207-846-1441
© COPYRIGHT 2011
M.S.E. Proj. 1032

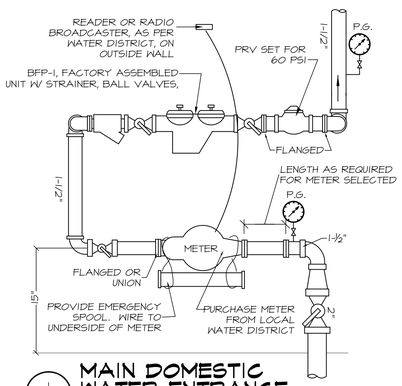

1 / AP.1 MAIN DOMESTIC WATER ENTRANCE
SCALE: NONE

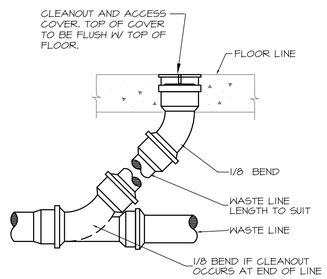

2 / TYP FLOOR CLEAN OUT DETAIL
SCALE: NONE

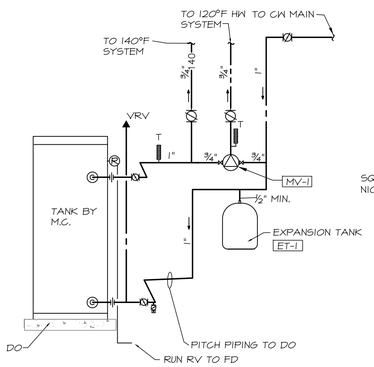

3 / AP.1 HOT WATER TANK DIAGRAM
SCALE: NONE

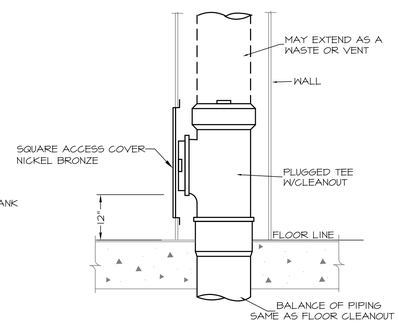

4 / TYP WALL CLEAN OUT DETAIL
SCALE: NONE

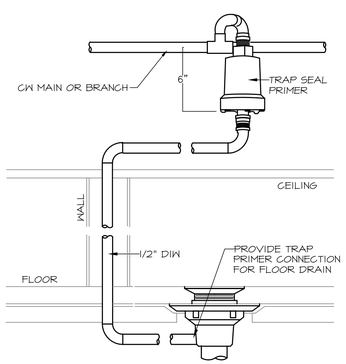

5 / TYP TRAP SEAL PRIMER #2
SCALE: NONE

GENERAL NOTES

1. All work shall be in accordance with the Uniform Plumbing Code, local codes and ordinances, National Fire Code (NFPA), or these plans or specifications, whichever is more strict.

2. All drawings are schematic only, and are intended to indicate the intent, extent, and general arrangement of work. They are not meant to show every fitting, change of direction or every situation. Verify locations in the field. Work indicated shall be furnished complete to perform the function intended.

3. Carefully coordinate the space requirements and location of piping with the other trade contractors. Reserve space for sprinkler mains. If coordination fails, conflicts will be decided in favor of the other contractors with this contractor relocating his piping and equipment at no expense to the Owner.

4. All plumbing fixtures shall be back vented.

5. This contractor shall make all final plumbing connections to equipment/ fixtures provided by other contractors.

6. For pipe sizes not shown on floor plans, refer to: adjacent or enlarged plumbing plans, then appropriate schedules, details, equipment connection sizes and minimum Code requirements. For otherwise indeterminable pipe segments, the size shall be the same as the largest adjacent segment. Where pipe sizes are erroneously shown to decrease then increase, the smaller segment shall be increased to match the larger segment. When a conflict exists, the larger size shall govern. Pipe sizes are nominal (not O.D.) unless specifically noted otherwise.

7. All piping shall run concealed above ceilings, in walls, in soffits and in chases unless noted otherwise. Special care shall be taken when dropping 3" nominal pipe in 3-½" wall cavities to ensure correct fit and alignment.

8. No structural members shall be cut without approval of the Architect.

9. All plumbing shall be supported from the building structure. All piping 2" and larger shall be supported from the top chord of bar joists unless permission to do otherwise is obtained from the Structural Consultant. All piping drops to fixtures shall be anchored solid to walls with a steel support bracket with adjustable clip.

10. All water piping shall be installed parallel to building lines and pitched to low points. Provide drain-offs at low points. Piping shall be run neatly grouped together when practical.

11. All piping through roofs, concrete walls and masonry partitions shall have steel pipe sleeves. Openings between pipes and sleeves shall be caulked and sealed smoke and water tight. All pipe penetrations through a fire rated wall or floor shall have a UL rated fire stop system rated to match the rating of the wall, as per the NFPA.

12. All wall fixtures shall be carrier mounted unless otherwise specified.

13. All domestic water piping shall be insulated unless otherwise specified.

14. Run all piping on warm side of building insulation. No water, or waste lines shall be run in exterior walls, unless directly indicated.

15. Provide shock absorbers where shown on drawings, and on tops of risers/drops to all flush valves, dishwashers and clotheswashers. Type SA-1 unless indicated otherwise.

16. All sanitary waste piping less than 4" shall pitch down at ¼" per L.F. All 4" and larger piping shall pitch at ⅛" per L.F. whenever possible.

17. All Domestic copper water piping shall be type "K" or "L" copper, type "M" is prohibited.

PLUMBING FIXTURE SCHEDULE

TAG	FIXTURE	COLD WATER	120° WATER	140° WATER	SAN/ WASTE	VENT	REMARKS	MOUNTING HEIGHT
IM-1	ICEMAKER BOX	1/2"						PER MANUF'R
LV-1	LAVATORY, WALL HUNG - ADA	1/2"	1/2"		1-¼"x 1-½"	1-½"	VC, SINGLE HANDLE FAUCET	RIM 34"
MB-1	MOP BASIN	1/2"		1/2"	3"	1-½"	FLOOR MTD, MOLDED STONE 24"x24x10", VB FAUCET	FLOOR
SH-1	SHOWER - RIGHT HAND ADA	1/2"	1/2"		2"	1-½"	GELCOAT FIBERGLASS, OPEN, TOP, GRAB BARS, 38"x36"x77"	CONTROLS 48"
SK-1	SINK, SINGLE BOWL ADA	1/2"		1/2"	1-½" x 2"	1-½"	S.S. 22"x25"x6-1/2", KITCHEN FAUCET.	COUNTER
SK-2	SINK, SINGLE BOWL, BAR ADA	1/2"		1/2"	1-½"	1-½"	S.S. BAR SINK, BAR FAUCET.	COUNTER
UR-1	URINAL ADA	1"			2"	1-½"	1.0 GPF, VC, SA ON RISER	RIM 17"
WC-1	WATER CLOSET, TANK FLOOR MTD, STANDARD	1"			4"	2"	1.6 GPF, VC, 16-1/8" TO RIM,	FLOOR
WC-2	WATER CLOSET, TANK FLOOR MTD - ADA	1"			4"	2"	1.6 GPF, VC, 16-1/8" TO RIM, RIGHT HAND HANDLE	FLOOR

WATER SPEC. SCHEDULE

TAG	ITEM	CW	HW	OUTLET	REMARKS
BFP-1	WATER ENTRANCE BACKFLOW PREVENTERS	2"	-	SAME	
BFP-2	BOILER MAKE-UP WATER	¾"	-	SAME	
ET-1	EXPANSION TANK POTABLE WATER	3/4"	-	-	
HB-1	NON-FREEZE HOSE BIB W/ VB	3/4"	-	¾" GHT	
MV-1	MASTER MIXING VALVE , THERMOSTATIC	3/4"	3/4"	3/4"	120°
SA-1	SHOCK ABSORBER	1/2"		-	P.D.I. A
TP-1	TRAP SEAL PRIMER, LAVATORY	3/8"	-	SAME	
TP-2	TRAP SEAL PRIMER	1/2"	-	SAME	

DRAIN SPEC. SCHEDULE

TAG	ITEM	WASTE	VENT	REMARKS
FCO-1	ROUND - FINISHED FLOOR CLEANOUT	SIZE OF PIPE	-	
FCO-2	ROUND - FINISHED FLOOR CLEANOUT FOR CARPET	SIZE OF PIPE	-	
FD-1	GENERAL ROUND FLOOR DRAIN	3"	1-½"	
FD-2	INDIRECT WASTE OPEN HUB WITH P-TRAP	3"	1-½"	PCV
FD-3	BOILER ROOM FLOOR DRAIN	3"	1-½"	

STATE OF MAINE
DEPARTMENT OF TRANSPORTATION

PROJECT NUMBER 017820.00

PIN 017820.00

STATE OF MAINE · Kurt F. Magnusson 10257 · PROFESSIONAL ENGINEER

PROJ. MANAGER	CRAIG R. MORIN	BY	DATE
DESIGN-DETAILED	EJP	EJP	3/25/11
CHECKED-REVIEWED	KFM	KFM	3/25/11
DESIGN2-DETAILED2	-	-	-
DESIGN3-DETAILED3	-	-	-
REVISIONS 1	-	-	-
REVISIONS 2	-	-	-
REVISIONS 3	-	-	-
REVISIONS 4	-	-	-
FIELD CHANGES	-	-	-

SIGNATURE

P.E. NUMBER

DATE MARCH 25, 2011

PORTLAND INTERNATIONAL
MARINE TERMINAL IMPROVEMENTS
PORTLAND CUMBERLAND COUNTY

PLUMBING SCHEDULES & DETAILS

SHEET NUMBER
A.P2

June 07, 2011 – 1:01 pm
\\Msefps\projects\1032 Portland IMT Office\Drawings\1032-P2.dwg

Bartlett Design
LIGHTING & ELECTRICAL ENGINEERING
942 WASHINGTON STREET, BATH, ME 04530
TEL (207) 443-5447 FAX (207) 443-5560

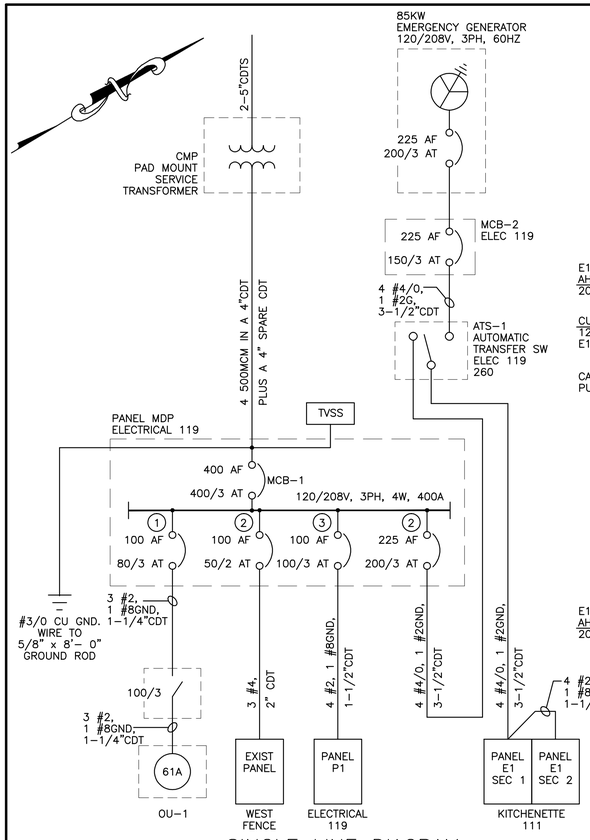

SINGLE LINE DIAGRAM

NOT TO SCALE

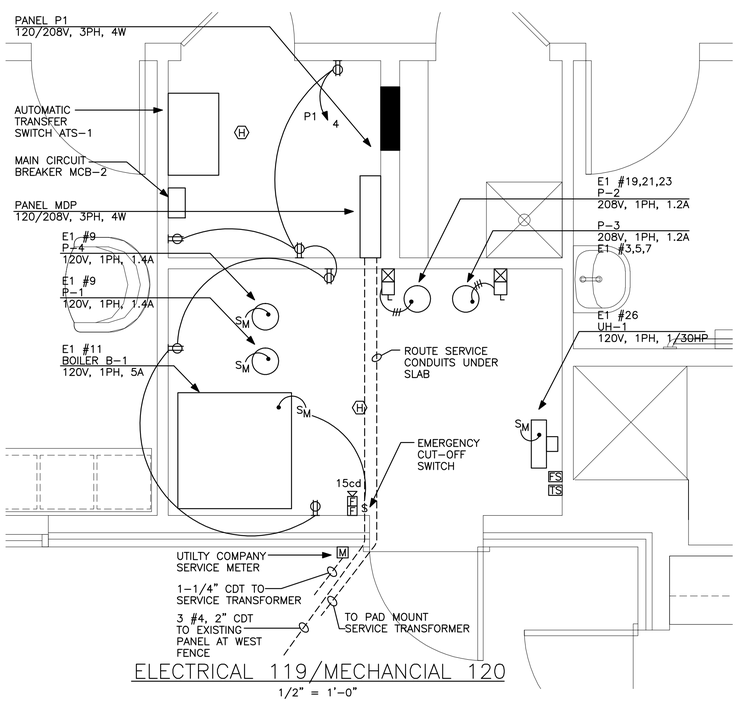

ELECTRICAL 119/MECHANCIAL 120

1/2" = 1'-0"

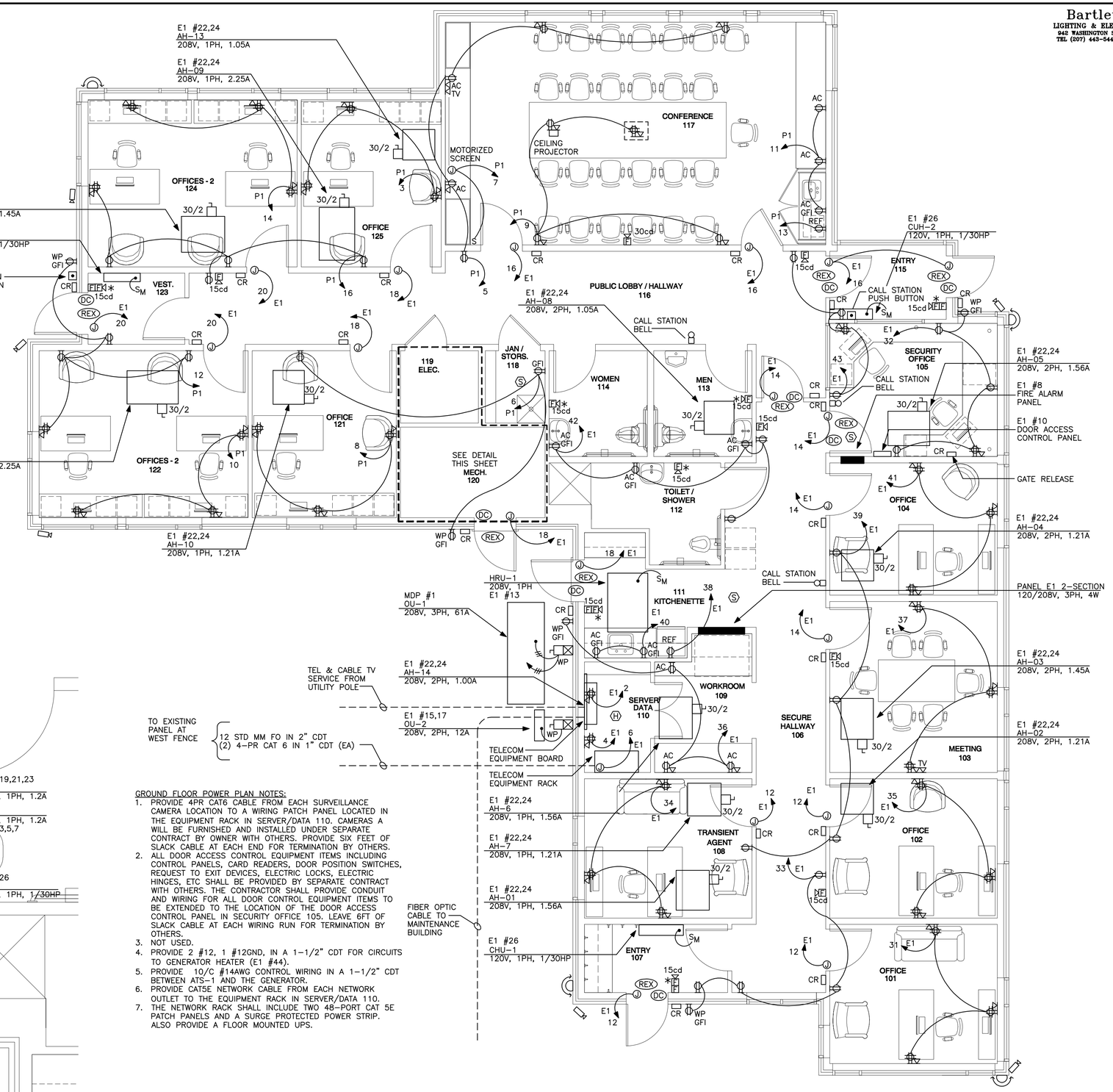

GROUND FLOOR POWER PLAN NOTES:

1. PROVIDE 4PR CAT6 CABLE FROM EACH SURVEILLANCE CAMERA LOCATION TO A WIRING PATCH PANEL LOCATED IN THE EQUIPMENT RACK IN SERVER/DATA 110. CAMERAS A WILL BE FURNISHED AND INSTALLED UNDER SEPARATE CONTRACT BY OWNER WITH OTHERS. PROVIDE SIX FEET OF SLACK CABLE AT EACH END FOR TERMINATION BY OTHERS.
2. ALL DOOR ACCESS CONTROL EQUIPMENT ITEMS INCLUDING CONTROL PANELS, CARD READERS, DOOR POSITION SWITCHES, REQUEST TO EXIT DEVICES, ELECTRIC LOCKS, ELECTRIC HINGES, ETC SHALL BE PROVIDED BY SEPARATE CONTRACT WITH OTHERS. THE CONTRACTOR SHALL PROVIDE CONDUIT AND WIRING FOR ALL DOOR CONTROL EQUIPMENT ITEMS TO BE EXTENDED TO THE LOCATION OF THE DOOR ACCESS CONTROL PANEL IN SECURITY OFFICE 105. LEAVE 6FT OF SLACK CABLE AT EACH WIRING RUN FOR TERMINATION BY OTHERS.
3. NOT USED.
4. PROVIDE 2 #12, 1 #12GND, IN A 1-1/2" CDT FOR CIRCUITS TO GENERATOR HEATER (E1 #44).
5. PROVIDE 1Q/C #14AWG CONTROL WIRING IN A 1-1/2" CDT BETWEEN ATS-1 AND THE GENERATOR.
6. PROVIDE CAT5E NETWORK CABLE FROM EACH NETWORK OUTLET TO THE EQUIPMENT RACK IN SERVER/DATA 110.
7. THE NETWORK RACK SHALL INCLUDE TWO 48-PORT CAT 5E PATCH PANELS AND A SURGE PROTECTED POWER STRIP. ALSO PROVIDE A FLOOR MOUNTED UPS.

GROUND FLOOR POWER PLAN

1/4" = 1'-0"

STATE OF MAINE
DEPARTMENT OF TRANSPORTATION

PROJECT NUMBER 017820.00

PIN
017820.00

STATE OF MAINE
LAWRENCE E. BARTLETT
No. 7928
PROFESSIONAL ENGINEER

		BY	DATE
PROJ. MANAGER	CRAIG R. MORIN		
DESIGN-DETAILED	LEB	JLC	3/25/11
CHECKED-REVIEWED	LEB	LEB	3/25/11
DESIGN2-DETAILED2	-	-	-
DESIGN3-DETAILED3	-	-	-
REVISIONS 1	-	-	-
REVISIONS 2	-	-	-
REVISIONS 3	-	-	-
REVISIONS 4	-	-	-
FIELD CHANGES	-	-	-

Lawrence E. Bartlett
SIGNATURE
7928
P.E. NUMBER
03/25/11
DATE

PORTLAND INTERNATIONAL
MARINE TERMINAL IMPROVEMENTS
PORTLAND CUMBERLAND COUNTY

OFFICE BLDG. POWER PLAN

SHEET NUMBER

A.E1

Bartlett Design
LIGHTING & ELECTRICAL ENGINEERING
942 WASHINGTON STREET, BATH, ME 04530
TEL (207) 443-5447 FAX (207) 443-5560

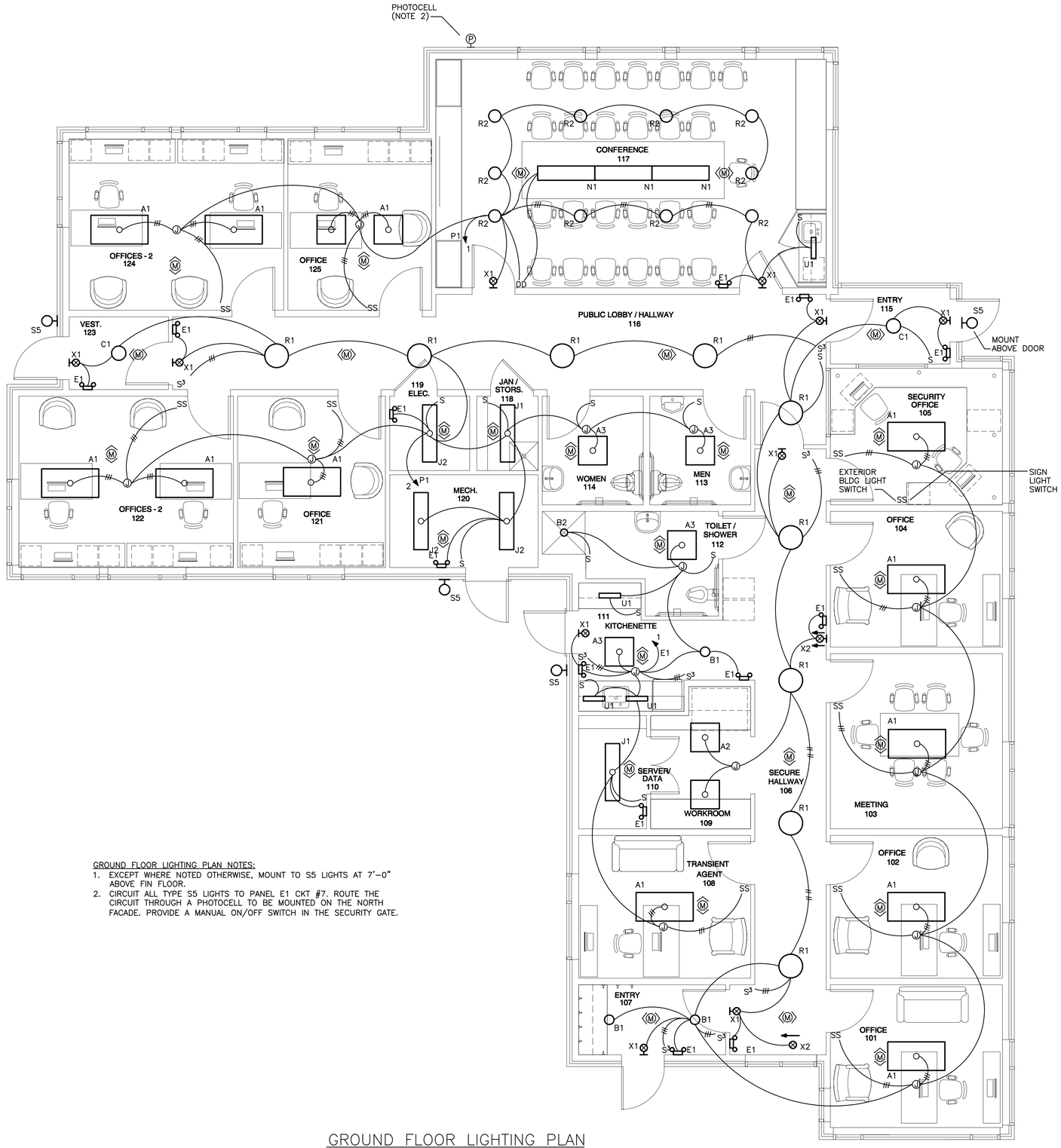

GROUND FLOOR LIGHTING PLAN NOTES:

1. EXCEPT WHERE NOTED OTHERWISE, MOUNT TO S5 LIGHTS AT 7'-0" ABOVE FIN FLOOR.
2. CIRCUIT ALL TYPE S5 LIGHTS TO PANEL E1 CKT #7. ROUTE THE CIRCUIT THROUGH A PHOTOCELL TO BE MOUNTED ON THE NORTH FACADE. PROVIDE A MANUAL ON/OFF SWITCH IN THE SECURITY GATE.

GROUND FLOOR LIGHTING PLAN

1/4" = 1'-0"

STATE OF MAINE
DEPARTMENT OF TRANSPORTATION

PROJECT NUMBER 017820.00

PIN
017820.00

STATE OF MAINE
LAWRENCE E. BARTLETT
No. 7928
LICENSED
PROFESSIONAL ENGINEER

		BY	DATE
PROJ. MANAGER	CRAIG R. MORIN		
DESIGN-DETAILED	LEB	JLC	3/25/11
CHECKED-REVIEWED	LEB	LEB	3/25/11
DESIGN2-DETAILED2	-	-	-
DESIGN3-DETAILED3	-	-	-
REVISIONS 1	-	-	-
REVISIONS 2	-	-	-
REVISIONS 3	-	-	-
REVISIONS 4	-	-	-
FIELD CHANGES	-	-	-

Lawrence E. Bartlett
SIGNATURE

7928
P.E. NUMBER

03/25/11
DATE

PORTLAND INTERNATIONAL
MARINE TERMINAL IMPROVEMENTS
PORTLAND CUMBERLAND COUNTY

OFFICE BLDG. LIGHTING PLAN

SHEET NUMBER

A.E2

Bartlett Design
LIGHTING & ELECTRICAL ENGINEERING
942 WASHINGTON STREET, BATH, ME 04530
TEL (207) 443-5447 FAX (207) 443-5560

ELECTRICAL PLAN & SINGLE LINE SYMBOLS

SYMBOL	DESCRIPTION
	125V, 20A, DUPLEX GROUNDED RECEPTACLE GFI = Ground Fault Interrupt AC = 6" Above Counter or Sink WP = Weatherproof TR = Technology Receptacle WN = Wireless Network Outlet (12" below the clg)
	QUAD RECEPTACLE
30A	250V, SINGLE GROUNDED RECEPTACLE Indicates Ampere Rating
	DUPLEX DATA PROCESSING OUTLET
	TELEPHONE OUTLET W = Wall Mounted Height 48"
	COMBINATION DATA/TELEPHONE OUTLET
	RECESSED FLOOR BOX (Contents May Vary, See Plan for Details)
TV	CABLE TELEVISION OUTLET
J	JUNCTION BOX
J	WALL MOUNTED JUNCTION BOX
	CONTROL PANEL (See Plan for Details)
	ELECTRICAL PANELBOARD (See Plan for Details and Mounting)
	DOOR HOLDER
	MOTOR STARTER
30/3	UNFUSED DISCONNECT SWITCH FU = Fused No. of Poles Ampere Rating
SM	MANUAL MOTOR STARTER
	DOORBELL
	PUSHBUTTON
M	WALL MTD MOTION DETECTOR
M	CLG MTD MOTION DETECTOR
	FIXED CAMERA LOCATION
PTZ	PTZ CAMERA LOCATION
CR	SECURITY SYSTEM CARD READER
K	SECURITY SYSTEM KEYPAD
30cd F *	FIRE ALARM AUDIO/VISUAL INDICATOR Indicates Visual Only, No Horn Candela Rating
F	FIRE ALARM PULL STATION
H	FIRE ALARM HEAT DETECTOR
S D	FIRE ALARM SMOKE DETECTOR Indicates Duct Mounted
S	FIRE ALARM WALL MOUNTED SMOKE DETECTOR
TS	FIRE ALARM TAMPER SWITCH
FS	FIRE ALARM FLOW SWITCH

SYMBOL	DESCRIPTION
b A1	RECESSED/SURFACE MOUNTED 1X4 LIGHTING FIXTURE Fixture Designation Switching Control Designation (See Lighting Fixture Schedule for Details)
b A2	RECESSED/SURFACE MOUNTED 2X4 LIGHTING FIXTURE Fixture Designation Switching Control Designation (See Lighting Fixture Schedule for Details)
b A3	RECESSED/SURFACE MOUNTED 2X2 LIGHTING FIXTURE Fixture Designation Switching Control Designation (See Lighting Fixture Schedule for Details)
b B1	RECESSED/SURFACE MOUNTED CIRCULAR LIGHTING FIXTURE Fixture Designation Switching Control Designation (See Lighting Fixture Schedule for Details)
b B2	RECESSED/SURFACE MOUNTED ACCENT LIGHTING FIXTURE Fixture Designation Switching Control Designation (See Lighting Fixture Schedule for Details)
b W1	WALL MOUNTED LIGHTING FIXTURE Fixture Designation Switching Control Designation (See Lighting Fixture Schedule for Details)
E1	WALL MOUNTED EMERGENCY LIGHTING FIXTURE Fixture Designation (See Lighting Fixture Schedule for Details)
E2	CEILING MOUNTED EMERGENCY LIGHTING FIXTURE Fixture Designation (See Lighting Fixture Schedule for Details)
X1	WALL MOUNTED EXIT SIGN Fixture Designation (See Lighting Fixture Schedule for Details) Provide Directional Arrows as Indicated on Plans
X2	CEILING MOUNTED EXIT SIGN Fixture Designation (See Lighting Fixture Schedule for Details) Provide Directional Arrows as Indicated on Plans
Sa	LIGHTING/DEVICE SWITCH 3 = Three-Way Type 4 = Four-Way Type WP = Weatherproof PL = Pilot Light Switching Control Designation (See Plans for Details)
Da	LIGHTING DIMMER 3 = Three-Way Type 4 = Four-Way Type Switching Control Designation (See Plans for Details)
TCP	TEMPERATURE CONTROL PANEL Provided Under Div 15 Wired Under Div 16
VFD	VARIABLE FREQUENCY DRIVE Provided Under Div 15 Wired Under Div 16
MOD	MOTOR OPERATED DAMPER Provided Under Div 15 Wired Under Div 16
P1 3 #	HOMERUN TO PANELBOARD Indicates No. of Wires, Excluding Ground Circuit No. Panelboard Designation

* NOTE NOT ALL SYMBOLS USED *

SYMBOL	DESCRIPTION
200 AF 200/3 AT	Ampere Frame Rating CIRCUIT BREAKER Ampere Trip Rating
	ELECTRICAL CONNECTION
	GROUND CONNECTION
	EQUIPMENT ENCLOSURE
	TRANSFORMER
FU: 60A 200/2	Fuse Rating DISCONNECT SWITCH No. of Poles Ampere Rating
M	UTILITY CO. SERVICE METER
ST	SHUNT TRIP
800 AF 700/3 AT	ENCLOSED CIRCUIT BREAKER
20 HP	MOTOR

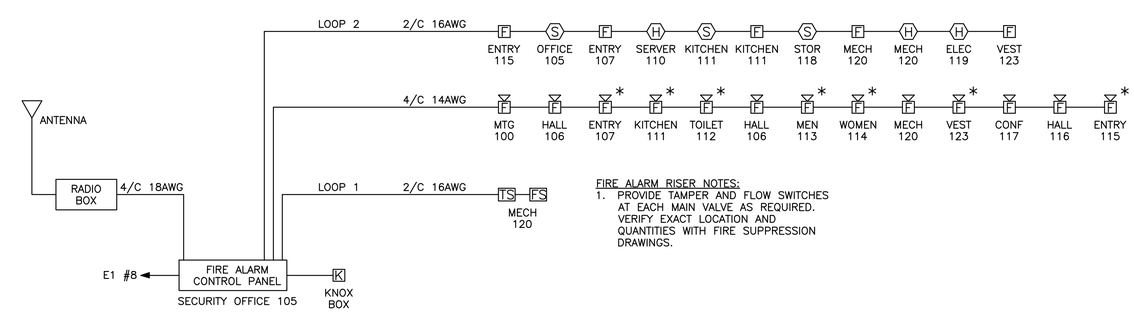

FIRE ALARM RISER NOTES:
1. PROVIDE TAMPER AND FLOW SWITCHES AT EACH MAIN VALVE AS REQUIRED. VERIFY EXACT LOCATION AND QUANTITIES WITH FIRE SUPPRESSION DRAWINGS.

FIRE ALARM RISER DIAGRAM

NOT TO SCALE

STATE OF MAINE
DEPARTMENT OF TRANSPORTATION

PROJECT NUMBER 017820.00

PIN 017820.00

STATE OF MAINE LAWRENCE E. BARTLETT No. 7928 LICENSED PROFESSIONAL ENGINEER

PROJ. MANAGER	CRAIG R. MORIN		
DESIGN-DETAILED	LEB	JLC	3/25/11
CHECKED-REVIEWED	LEB	LEB	3/25/11
DESIGN2-DETAILED2	-	-	-
DESIGN3-DETAILED3	-	-	-
REVISIONS 1	-	-	-
REVISIONS 2	-	-	-
REVISIONS 3	-	-	-
REVISIONS 4	-	-	-
FIELD CHANGES	-	-	-

Lawrence E. Bartlett
SIGNATURE

7928
P.E. NUMBER

03/25/11
DATE

PORTLAND INTERNATIONAL
MARINE TERMINAL IMPROVEMENTS
PORTLAND CUMBERLAND COUNTY

OFFICE BLDG. ELEC. DETAILS

SHEET NUMBER

A.E3